FURUNO

OPERATOR'S MANUAL

RADAR REMOTE DISPLAY

MODEL FMD-811

FURUNO ELECTRIC CO., LTD.
NISHINOMIYA, JAPAN

© FURUNO ELECTRIC CO., LTD.

9-52, Ashihara-cho,
Nishinomiya, Japan

Telephone: 0798-65-2111
Telefax: 0798-65-4200

•Your Local Agent/Dealer

All rights reserved. Printed in Japan

FIRST EDITION : NOV. 1995
J : APR. 3, 2001

PUB. No. OME-34270
FMD-811
(DAMI)

00080742500

⚠ SAFETY INFORMATION

"**NOTIICE**", "**CAUTION**" and "**WARNING**" notices appear throughout this manual. It is the responsibility of the operator and installer of the equipment to read, understand and follow these notices. If you have any questions regarding these safety instructions, please contact a FURUNO agent or dealer.

⚠ WARNING	This notice indicates a potentially hazardous situation which, if not avoided, could result in death or serious injury.
⚠ CAUTION	This notice indicates a potentially hazardous situation which, if not avoided, could result in minor or moderate injury or property damage.
NOTICE	This notice indicates an unsafe practice which, if not avoided, could result in property damage or equipment malfunction.

⚠ WARNING

Hazardous voltage.
Can shock, burn, or cause death.

Only qualified personnel should work in the unit.

Turn off the power at the ship's mains switchboard before beginning the installation. Post a warning sign near the switchboard to ensure the power will not be applied while the radar system is being installed.

Electrical shock, fire, serious injury or death can result if the power is not turned off, or is applied while the equipment is being installed.

⚠ CAUTION

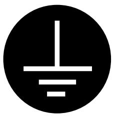

Ground both the display unit and the antenna unit.

Ungrounded equipment can give off or receive interference or cause electrical shock.

Confirm that the power supply voltage is compatible with the voltage rating of the equipment.

Connection to the wrong power supply can cause fire or equipment damage. The voltage rating appears on the label at the rear of the display unit.

Use only the supplied power cable.

Use of other power cables (particularly a cables whose diameter is smaller than the supplied cable) can cause fire or short circuit.

Use the correct fuse.

Use of a wrong fuse can cause fire or equipment damage.

NOTICE

The installation must be done by a FURUNO representative or suitably qualified radar technician.

Authorities require this.

The mounting location must satisfy the following conditions:

- Useable temperature: -15°C to 55°C
- Out of direct sunlight
- Away from air conditioner vents
- Well ventilated

Observe the compass safe distances to prevent deviation of a magnetic compass.

	Standard compass	Steering compass
Display Unit	0.7 m	0.5m
Scanner Unit	3.1 m	1.75 m

Keep magnets and magnetic fields away from the equipment.

Magnetic fields will distort the picture and can cause equipment malfunction. Be sure the unit is well away from equipment which gives off magnetic fields (speaker, power transformer, etc.).

TABLE OF CONTENTS

FOREWORD iv
SPECIFICATIONS v

1. OPERATION

1.1 Control Description 1
1.2 Display Indications and Markers 2
1.3 Turning the Radar On and Off 2
1.4 Showing Radar Picture 3
1.5 Selecting the Range 3
1.6 Adjusting LCD Backlighting and Display Tone 3
1.7 Adjusting Control Panel Brilliance 3
1.8 Adjusting GAIN, STC, A/C RAIN and A/C AUTO 3
1.9 Measuring the Range 5
1.10 Measuring the Bearing 6
1.11 Selecting the Presentation Mode 7
1.12 Menu Operation 7
1.13 Selecting the Display Mode 9
1.14 The Window Display 10
1.15 Guard Alarm 10
1.16 Suppressing Radar Interference 12
1.17 Suppressing Noise Interference 12
1.18 Off Centering the Display 12
1.19 Echo Trails 13
1.20 The Navigation Data Display 14
1.21 Echo Stretch 14
1.22 Selecting Unit of Measurement for Range 15
1.23 Selecting Bearing Reference 15
1.24 Erasing the Heading Marker 15
1.25 Deselecting Ranges 16
1.26 Displaying Navigation During Stand-by 16
1.27 Outputting Cursor Position to Navigator 17
1.28 Displaying Cursor Position, Range and Bearing to Cursor 17
1.29 Visual Alarm Indications 17

2. INTERPRETING THE DISPLAY

2.1 The Radar Wave and Radar Horizon . 18
2.2 Target Properties and Radar Wave Reflection 18
2.3 Range Resolution 19
2.4 Bearing Resolution 19
2.5 False Echoes 19
2.6 Nautical Chart and Radar Picture 21

3. MAINTENANCE & TROUBLESHOOTING

3.1 Safety Information 22
3.2 Preventative Maintenance 23
3.3 Replacing the Fuse 23
3.4 Troubleshooting 24
3.5 Self Test 25

4. INSTALLATION

4.1 Display Unit Installation 26
4.2 Mounting Procedure 26
4.3 Connections 28
4.4 Installation Check List 31
4.5 Initial Adjustment of Picture 31
4.6 Displaying the Installation Menus 32
4.7 Entering Initial Settings 33
4.8 Relative Bearing alignment 33
4.9 Sweep Timing 34
4.10 Closing the Installation Menus 34
4.11 Signal Cable Connection 34

Appendix A INSTALLATION OF BUFFER CIRCUIT

FOREWORD

Congratulations on your choice of the FURUNO FMD-811 Radar Remote Display. We are confident you will see why the FURUNO name has become synonymous with quality and reliability.

For over 50 years FURUNO Electric Company has enjoyed an enviable reputation for innovative and dependable marine electronics equipment. This dedication to excellence is furthered by our extensive global network of agents and dealers.

Your radar is designed and constructed to meet the rigorous demands of the marine environment. However, no machine can perform its intended function unless properly installed and maintained. Please carefully read and follow the recommended procedures for installation, operation and maintenance.

While this unit can be installed by the purchaser, any purchaser who has doubts about his or her technical abilities may wish to have the unit installed by a FURUNO representative or other qualified technician. The importance of a thorough installation cannot be overemphasized.

We would appreciate hearing from you, the end-user, about whether we are achieving our purposes.

Thank you for considering and purchasing FURUNO equipment.

Features

Your radar has a large variety of functions, all contained in a remarkably small cabinet.

The main features of the FMD-811 is:

- Traditional FURUNO reliability and quality in a compact, lightweight and low-cost.
- Remote Radar Display.
- High definition 8" LCD raster-scan display.
- Targets can be displayed in black on white background or vice versa for optimal viewing under any lighting.
- On-screen alphanumeric readout of all operational information.
- Standard features include EBL (Electronic Bearing Line), VRM (Variable Range Marker), Guard Alarm, Display Off Center and Echo Trail.
- Operates on 10.2 to 31.2 V DC power supply and consumes about 14 W.
- Ship’s position in latitude and longitude (or Loran C Time Differences), range and bearing to a waypoint, ship’s speed, heading and course can be shown in the bottom text area. (Requires a navigation aid which can output such data in NMEA 0183 format.)

SPECIFICATIONS
FMD-811

1. **Indication system**
   PPI raster scan
2. **Display**
   8-inch diagonal LCD, STN semi-transparent, yellow mode
3. **Range scales (nm)**
   Range, Ring Interval: 0.125(0.0625), 0.25(0.125), 0.5(0.125), 0.75(0.25), 1(0.25), 1.5(0.5), 2(0.5), 3(1), 4(1), 6(2), 8(2), 12(3), 16(4), 24(6), 36(12), 48(12), 64(16), 72(24)
4. **Markers**
   Heading marker, Bearing scale, Range ring, VRM, EBL, Waypoint (option), Tuning indicator, Alarm zone, Cursor
5. **Alphanumeric indication**
   Standard: Electronic Bearing Line (EBL), Echo Stretch (ES), A/C AUTO, Alarm (G), Interference Rejection (IR), Stand-by (ST-BY), Echo Trail Time (TRAIL), Variable Range Marker (VRM), Range, Range Ring Interval, Range and Bearing to Cursor(+), Off Center (OFFCENTER), With navigation input (option): Course (CRS), Latitude and longitude, Speed (SPD), Range and bearing to waypoint (WP), Cross Track Error (XTE), Date and time, Water depth, Water temperature. *(This radar has only two data input ports. To receive data from more than two equipment install an mixing device.)*
6. **Graphic indication**
   Barometer, Water Depth (with optional depth data input)
7. **Vibration**

Vibration freq.	Total amplitude
5 to 12.5 Hz	±1.6 mm
12 to 25 Hz	±0.35 mm
25 to 50 Hz	±0.10 mm

8. **Useable temperature**
   0˚C to +60˚C
   Due to the inherent nature of the LCD its contrast may be affected under ambient temperature below 0˚C (32˚F) or above 50˚C (122˚F).
9. **Useable humidity**
   Relative humidity 95% or less at +40˚C
10. **Waterproofing**
    IEC Pub no. 529 IPX5
11. **Power supply & power consumption**
    12 V or 24V(10.2 V to 31.2 V DC), 14 W approx.
12. **Protection features**
    Protection against reverse polarity, overvoltage, overcurrent, and internal fault
13. **Compass safe distance**

Standard compass	Steering compass
0.7 m	0.5 m

14. **Connectable Radars**
    Radars having log amplifier
    MODEL 1831
    MODEL 1931
    MODEL 1941
    FR-7041/7111
    FR-1500 M2 Series
    FR-8051/8111/8251
    FR-2000 Series
    FR-2100 Series

    Radars having linear amplifier
    MODEL 1941R
    MODEL 821/841
    FR-7041R
    FR-1400 Series
    FCR-1400 M3 Series
    FR-1500 Series
    FR-8000 Series

15. Interface NMEA

<u>Input</u>

Own ship's position:
RMA>RMC>GLL
(GLL is available Ver.5 and after.)

Speed: RMA>RMC>VTG>VHW

Heading (True):
HDT>VHW>HDG>VHW>HDM

Heading (Magnetic):
HDM>VHW>HDG>VHW>HDM

Course (True):
RMA>RMC>VTG

Course (Magnetic):
VTG>RMA>RMC

Waypoint (L/L, Range, Bearing):
RMB>BWC>BWR

Loran time difference:
RMA>GLC>GTD

Water depth: DPT>DBK, DBS, DBT

Water temperature: MDA>MTW

Time: ZDA

XTE: RMB>XTE>APB

<u>Output</u>

TLL: On using "HM OFF" key.

RSD: A cycle of four seconds

EQUIPMENT LIST

COMPLETE SET

Name	Type	Code No.	Q'ty
Display Unit	RDP-114		1
Fuse	FGBO-A 5A AC125 V	000-549-064	2
+Tapping screw	5x20 SUS 304	000-802-081	4
Installation Materials	See below.		1 set

INSTALLATION MATERIALS

Name	Type	Code No.	Q'ty
Signal cable (Selectable)	03S9298-3 (5 m)	000-136-810	1
	03S9299-3 (10 m)	000-136-811	
	03S9318-2 (15 m)	000-137-343	
	03S9300-3 (20 m)	000-136-812	
	03S9301-3 (30 m)	000-136-813	
	FM-C10FPD002-050 (5 m)	000-143-894*	
	FM-C10FPD002-100 (10 m)	000-143-893*	
	FM-C10FPD002-150 (15 m)	000-143-892*	
	FM-C10FPD002-200 (20 m)	000-143-891*	
	FM-C10FPD002-300 (30 m)	000-143-890*	
Connector assy	CP03-16001	008-469-980	1
	CP03-14902	008-462-100	1
Power cable	03S9148 (3.5 m)	000-129-613	1

*: For the MODEL 851 MARK-2

OPTION

Name	Type	Code No
Signal cable	03S9298	000-136-810
	03S9299	000-136-811
	03S9318	000-137-343
	03S9300	000-136-812
	03S9301	000-136-813
	FM-C10FPD002-050	000-143-894*
	FM-C10FPD002-100	000-143-893*
	FM-C10FPD002-150	000-143-892*
	FM-C10FPD002-200	000-143-891*
	FM-C10FPD002-300	000-143-890*
Rectifire	PR-62	-
External Buzzer	OP03-136	000-086-443

*: For the MODEL 851 MARK-2

CONFIGURATION

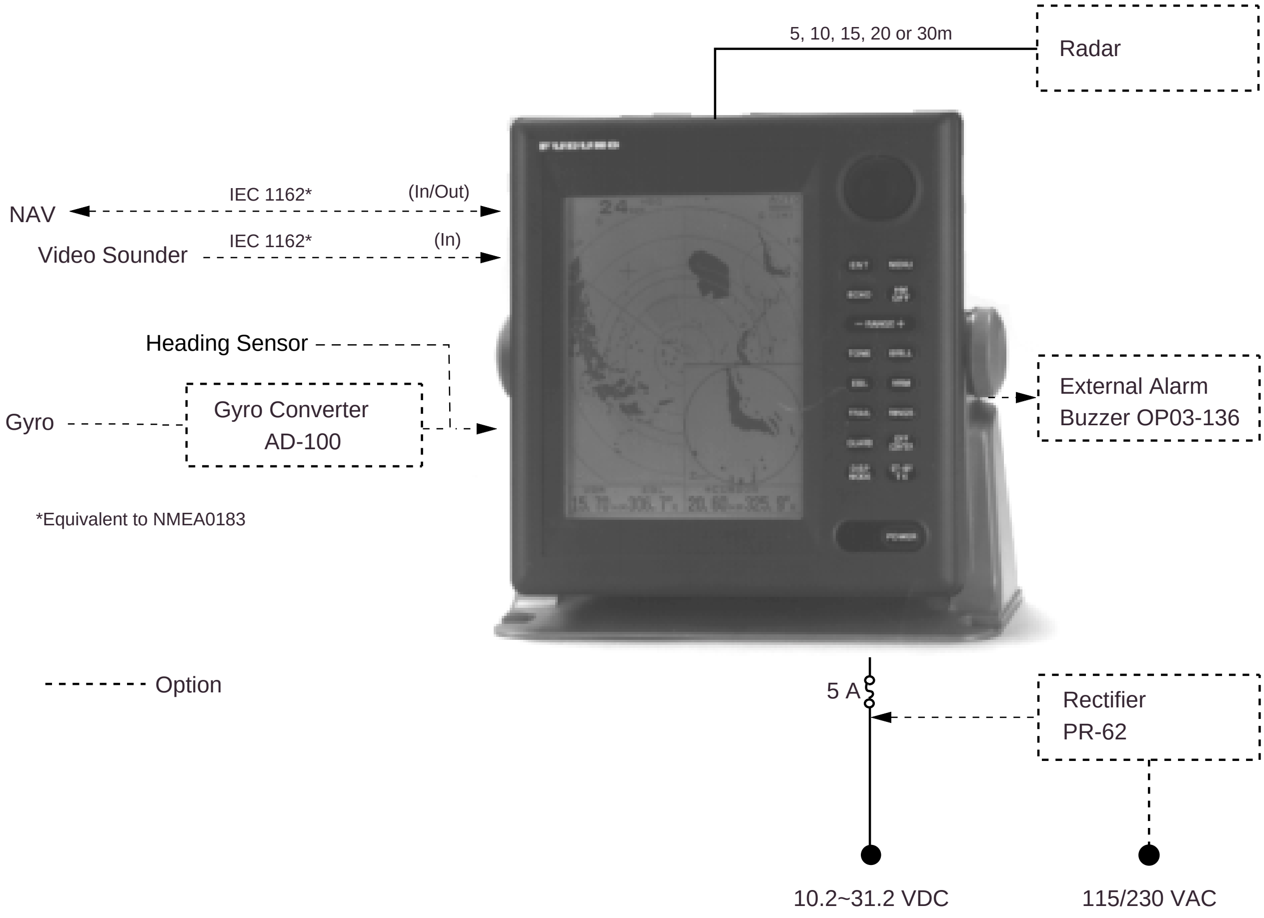

1. OPERATION

1.1 Control Description

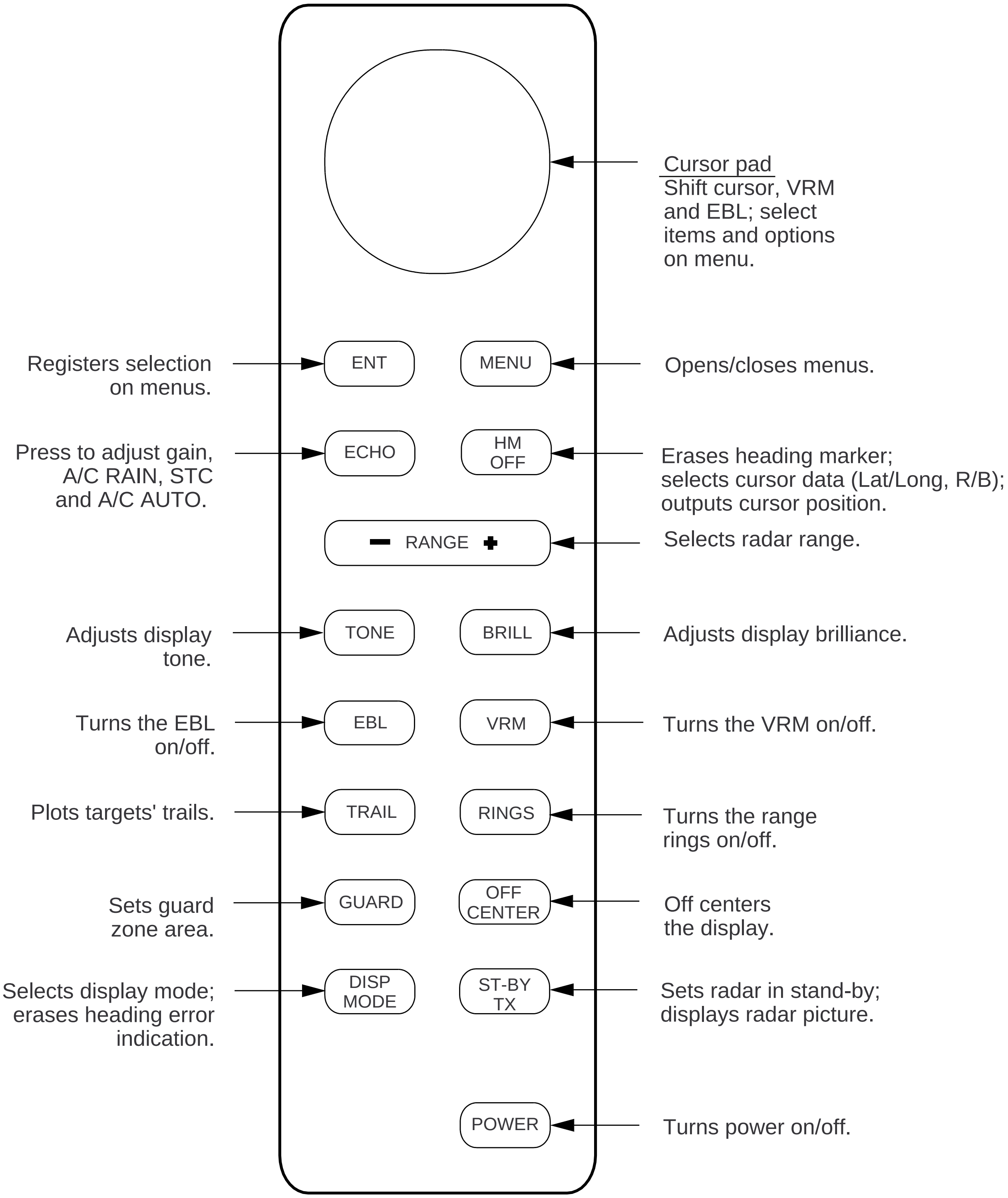

Figure 1-1 Control panel

1.2 Display Indications and Markers

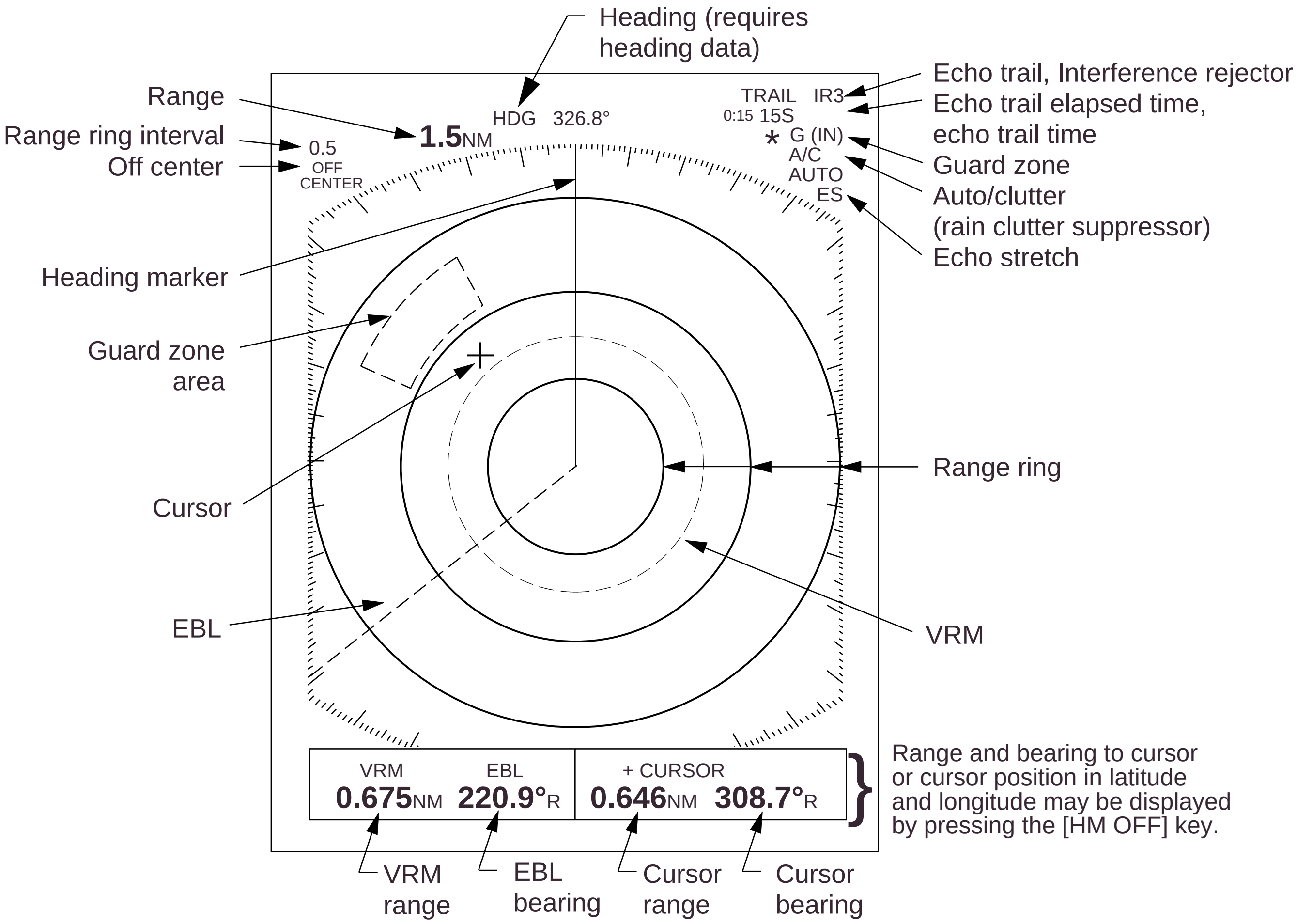

Figure 1-2 Display indications

1.3 Turning the Unit On and Off

Turning the radar on

Press the [POWER] key to turn the unit on or off. The control panel lights.

Note: When the heading signal is lost, the HDG readout at the top of the screen shows ***.*. This warning stays on when the heading signal is restored to warn the operator that the readout may be unrealiable. The warning may be erased by pressing the [DISP MODE] key.

1.4 Showing Radar Picture

After the power is turned on,ST-BY (Stand-By) appears at the screen center.

Press the [ST-BY TX] key to display radar picture in four gray tones according to echo strength.

Press the [ST-BY TX] key again to set the radar in stand-by.

1.5 Selecting the Range

The range selected automatically determines the range ring interval and the number of range rings.

Procedure

Press the [– RANGE +] key. The range and range ring interval appear at the top left corner on the display.

Tips for selecting the range

- When navigating in or around crowded harbors, select a short range to watch for possible collision situations.
- If you select a lower range while on open water, increase the range occasionally to watch for vessels that may be heading your way.

1.6 Adjusting LCD Backlighting and Display Tone

The [BRILL] key adjusts the LCD backlighting in eight levels, including off. The [TONE] key adjusts the tone (contrast) of the display in 32 levels, including off.

Procedure

1) Press the [BRILL] key (or [TONE] key). The display shown in Figure 1-3 appears.

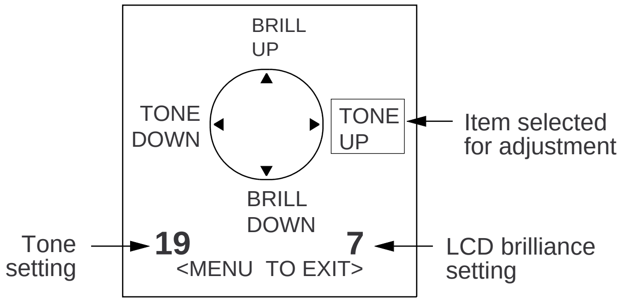

Figure 1-3 Display for adjustment of brilliance and tone

2) Press the [BRILL] key (or [TONE] key) to set level. For fine adjustment, press cursor pad at 12o'clock/6 o'clock for brilliance and 3o'clock/9o'clock for tone.

1.7 Adjusting Control Panel Brilliance

Procedure

1) Press the [MENU] key.
2) Press the cursor pad to select Backlight/Brilliance and press the [ENT] key.
3) Press the cursor pad to select Panel.
4) Press the cursor pad to select brilliance level; 4 is the highest.
5) Press the [ENT] key followed by the [MENU] key.

1.8 Adjusting GAIN, A/C RAIN and STC (A/C SEA)

General procedure

The [ECHO] key enables manual and automatic adjustment of the gain, STC and A/C RAIN and STC (A/C SEA).

1) Press the [ECHO] key. The following display appears.

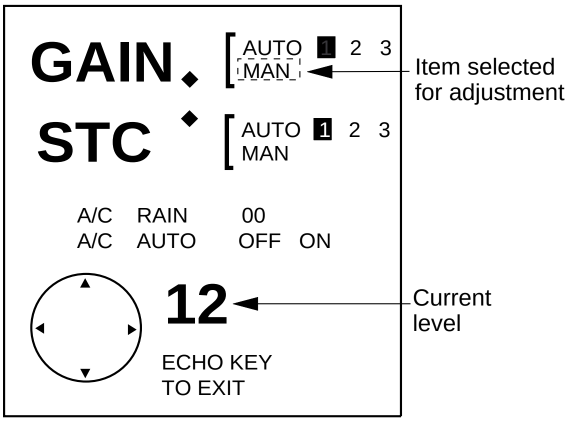

Figure 1-4 Display for adjustment of GAIN, STC, A/C RAIN

2) Press the cursor pad to select item to adjust. Current selection is circumscribed by dashed rectangle.

3) Press the [ENT] key.

3) Press the cursor pad to set level.

4) Press the [ECHO] key to finish.

The A/C AUTO function automatically suppresses sea clutter as well as rain clutter.

Note: With the radar having a linear amplifier, radar picture may not be adjusted properly through the menu.

How to adjust the gain (sensitivity)

The gain works in precisely the same manner as the volume control of a broadcast receiver, amplifying the signals received.

You can adjust the gain automatically or manually. For manual adjustment, adjust the sensitivity on the highest range—the background noise is clearer on that range. The proper setting is such that the background noise is just visible on the screen. If you set up for too little gain, weak echoes may be missed. On the contrary excessive gain yields too much background noise; strong targets may be missed because of the poor contrast between desired echoes and the background noise on the display.

How to adjust STC (suppressing sea clutter)

Echoes from waves can be troublesome, covering the central part of the display with random signals known as sea clutter. The higher the waves, and the higher the scanner above the water, the further the clutter will extend. Sea clutter appears on the display as many small echoes which might affect radar performance. (See the left-hand figure in Figure 1-5).

The STC reduces the amplification of echoes at short ranges (where clutter is the greatest) and progressively increases amplification as the range increases, so amplification will be normal at those ranges where there is no sea clutter. The control is effective up to about 4 miles.

STC can be adjusted automatically or manually. For manual adjustment, first adjust the gain and then transmit on short range. Adjust the STC level such that the clutter is broken up into small dots, and small targets become distinguishable. If the setting is set too low, targets will be hidden in the clutter, while if it is set too high, both sea clutter and targets will disappear from the display. In most cases adjust so clutter has disappeared to leeward, but a little is still visible windward.

If there is no clutter visible on the display, turn off the circuit.

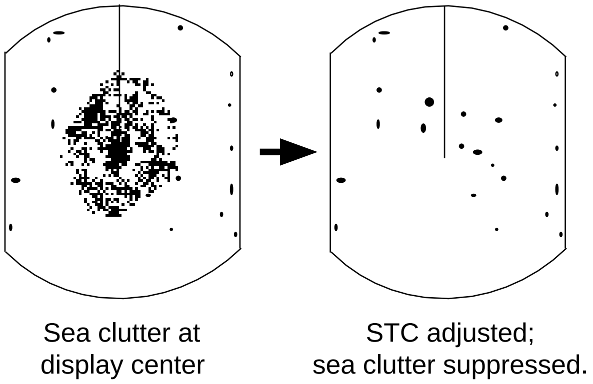

Figure 1-5 Effect of STC

How to adjust A/C RAIN

The vertical beamwidth of the scanner is designed to see surface targets even when the ship is rolling. However, by this design the unit will also detect rain clutter (rain, snow, hail, etc.) in the same manner as normal targets. Figure 1-6 shows the appearance of rain clutter on the display.

When rain clutter masks echoes over a wide range, raise the A/C RAIN slightly to distinguish targets from the clutter.

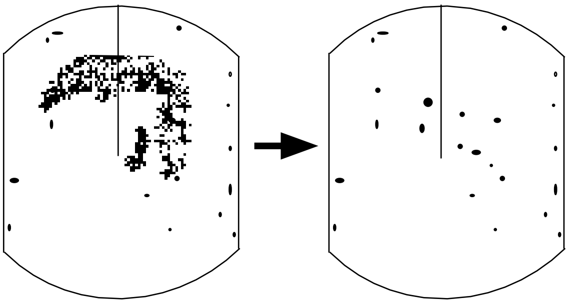

Appearance of rain clutter — A/C RAIN adjusted; rain clutter suppressed.

Figure 1-6 Effect of A/C RAIN

Turning on/off A/C AUTO

The A/C AUTO function automatically suppresses sea clutter as well as rain clutter.

Note however that with the A/C circuit on weak targets may be suppressed.

1.9 Measuring the Range

You can measure the range to a target three ways: by the range rings, by the cursor, and by the VRM (Variable Range Marker).

By range rings

Press the [RINGS] key to display the range rings. Count the number of rings between the center of the display and the target. Check the range ring interval (at the top left corner) and judge the distance of the echo from the inner edge of the nearest ring.

By cursor

Operate the cursor pad to place the cursor intersection on the inside edge of the target echo. The range to the target, as well as the bearing, appears at the bottom of the display.

By VRM

1) Press the [VRM] key to display the VRM.
2) Press the cursor pad to place the VRM on the inside edge of the target. (The cursor appears and is linked with the VRM, allowing you to measure both range and bearing to the target.)
3) Check the VRM readout at the bottom left-hand corner of the display to find the range to the target.

Note: The VRM is automatically anchored when no cursor pad key is operated within about 10 seconds.

To erase the VRM, press and hold down the [VRM] key for about three seconds.

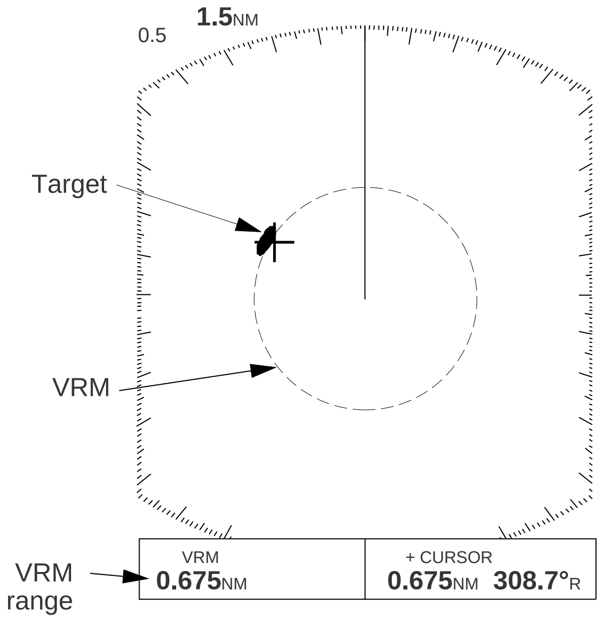

Figure 1-7 Measuring range by the VRM

1.10 Measuring the Bearing

There are two ways to measure the bearing to a target: by the cursor, and by the EBL (Electronic Bearing Line).

By cursor

Operate the cursor pad to bisect the target with the cursor intersection. The bearing to the target appears at the bottom right-hand corner of the display.

By EBL

1) Press the [EBL] key to display the EBL.

2) Press the cursor pad to bisect the target with the EBL. (The cursor appears and is linked with the EBL, allowing you to measure both bearing and range to the target.)

3) Check the EBL readout at the bottom left-hand corner of the display to find the bearing to the target.

Note: The EBL is automatically anchored when no cursor pad key is operated within about 10 seconds.

To erase the EBL, press and hold down the [EBL] key for about three seconds.

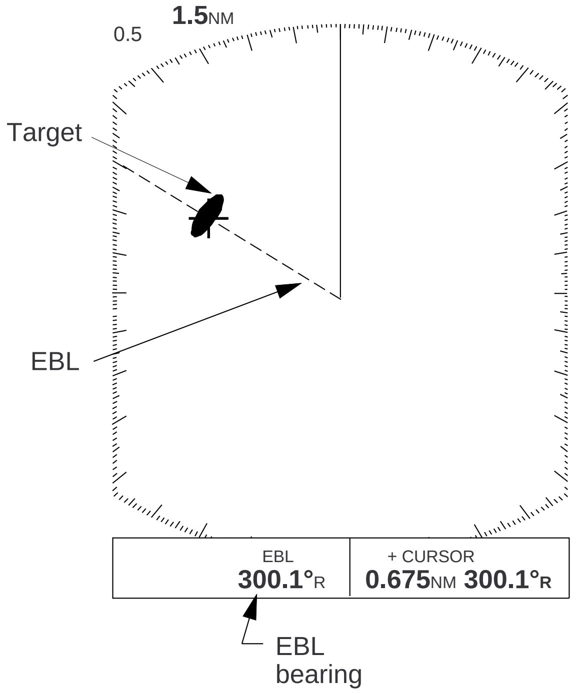

Figure 1-8 Measuring bearing by the EBL

Tips for measuring the bearing

- Bearing measurements of smaller targets are more accurate; the center of larger target echoes is not as easily identified.
- Bearings of stationary or slower moving targets are more accurate than bearings of faster moving targets.
- To minimize bearing errors keep echoes in the outer half of the picture by changing the range scale; angular difference becomes difficult to resolve as a target approaches the center of the display.

Target on collision course with your vessel?

You can determine if a target might be on a collision course with your vessel by placing the EBL on the target. If it tracks along the EBL as it approaches the screen center it may be on a collision course with your vessel.

1.11 Selecting the Presentation Mode

FMD-811 provides four presentation modes: head-up, course-up (course-up or waypoint-up; selectable on menu), north-up and true motion. Press the [DISP MODE] and [HM OFF] keys together to select a presentation mode. Each time the keys are pressed, if heading signal is input to the radar, the presentation mode changes in the sequence of HU, CU (or WU), NU, TM. If there is no heading signal input to the radar, the presentation mode is always HU.

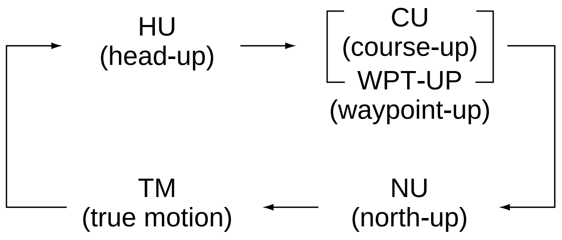

Selecting WPT-UP mode

You may select WPT-UP instead of CU on the menu.

<u>CU (couse-up)</u>

An azimuth stabilized display in which the line connecting the center with the top of the displau indicates own ship's intended course.

<u>WPT-UP (waypoint-up)</u>

An azimuth stabilized display in which the line connecting the center with the top of the display indicates the bearing to the “TO” waypoint, which is selected on the radionavigational equipment connected to the radar. When navigating a route and own ship enters the arrival zone of a waypoint, the radar displays the bearing to the next “TO” waypoint.

Procedure

1. Press the [MENU] key to open the menu.
2. Press the cursor pad to select 2. P/L, IR, NR & Radar Mode.
3. Press the cursor pad to select Radar mode.
4. Select option for CU or WPT-UP.
5. Press the [ENT] key followed by the [MENU] key.

1.12 Menu Operation

The menu, consisting of 6 sub menus, mostly contains less-often used functions which once preset do not require regular adjustment. To open or close the menu, press the [MENU] key. You can select items on the menu with the cursor pad

Basic menu operation

1) Press the [MENU] key to open the menu. The main menu appears.

● **MAIN MENU** ●

Select item by ▲▼keys
and press ENT key.
1. Backlight/Brilliance
2. P/L, IR, NR & Radar Mode
3. Nav Data
4. Mode & Function
5. Tuning **AUTO** MANUAL
6. Self Check
7. Installation Setup 1

. . . .
Set pulselength and interference/noise
rejectors and CU/WPT-UP in Radar mode.

<Press MENU key to escape.>

Figure 1-9 Main menu

2) Press the cursor pad to select menu and press the [ENT] key.
3) Press the cursor pad to select menu item.
4) Press the cursor pad to select option.
5) Press the [ENT] key to register selection.
6) Press the [MENU] key to close the menu.

Menu description

See the table on the next page.

Table 1-1 Menu description

Menu	Function
● **BACKLIGHT/BRILLIANCE MENU** ● Select item and option by ▲▼ keys. 1. Panel 1 2 3 **4** 2. Echo Trails **1** 2 . . . . Press HM-OFF to temporarily hide menu. <Press MENU for main menu.>	1. Selects control panel backlighting; four is maximum backlighting. 2. Selects brilliance for echo trails and markers; four is maximum brilliance.
● **P/L, IR, NR & RADAR MODE** ● Select item and option by ▲▼ keys. 1. Pulselength SHORT LONG 2. Int Reject OFF **1** 2 3 3. Noise Reject OFF **ON** 4. Echo Stretch **OFF** ON 5. Radar mode **CU** WPT/UP . . . . Press HM-OFF to temporarily hide menu. <Press MENU for main menu.>	1. Selects pulselength for 1.5 and 3 mile ranges. 2. Selects radar interference rejector level; 3 provides highest degree of rejection. 3. Turns noise rejector on/off. 4. Turns echo stretch on/off. 5. Select mode for CU or WPT-UP.
● **NAV DATA MENU** ● Select item and option by ▲▼ keys. 1. Navigator **ALL** GPS LC 2. Nav Data Disp **OFF** ON 3. Pos Disp Mode **L/L** TD 4. Depth Unit **M** FA FT 5. Temp Unit **¡C** ¡F 6. STBY Display **NORM** NAV . . . . Press HM-OFF to temporarily hide menu. <Press MENU for main menu.>	1. Selects navigator among GPS, Loran and all navigators available. In the "All" setting the radar selects a navigator in order of navigator accuracy—GPS, Loran and other. 2. Turns navigation data display on/off. 3. Selects position display format; latitude and longitude or Loran TDs. 4. Selects unit of measurement for depth; meters, feet or fathoms. 5. Selects unit of measurement for water temperature; ¡C or ¡F. 6. Selects what to display during stand-by; navigation data (requires navigation input) or "STBY".
● **MODE & FUNCTION MENU** ● Select item and option by ▲▼ keys. 1. Window Display **ZOOM** WIDE 2. Watchman OFF 5 10 20 3. Alarm Mode **IN** OUT 4. VRM Unit **NM** KM SM 5. EBL Ref **REL** TRUE 6. Range **1/8** **1/4** **1/2** **3/4** 1 **1/5** 2 **3** 4 **6** 8 **12** 16 **24** **36** 48 **64** 72 . . . . Press HM-OFF to temporarily hide menu. <Press MENU for main menu.>	1. Selects window display format; zoom or wide. 2. Selects watchman interval among 5 min, 10 min or 20 min. 3. Selects alarm mode; IN (alarm to targets entering the guard zone, or OUT (alarm to targets exiting the guard zone. 4. Selects VRM unit; nm, km or sm. 5. Selects EBL reference; relative or true. 6. Selects ranges to use. Select range to enable (disable) and press [ENT] key.
Tuning	Selects AUTOMATIC or MANUAL tuning.
Self Check	Checks the radar system for proper operation.

** Default settings shown in boldface.*

1.13 Selecting the Display Mode

The display mode may be selected with the [DISP MODE] key. Four modes are available (with navigation input): Normal, Normal + Window, Normal + Nav Data, and Normal + Window + Nav Data.

Each time the key is pressed the display mode changes in one of the sequences shown below, depending on equipment connected and menu settings.

Note: In the window display mode, the [DISP MODE] key reselects zoom area. To select the display mode while in the window display mode, press the key twice.

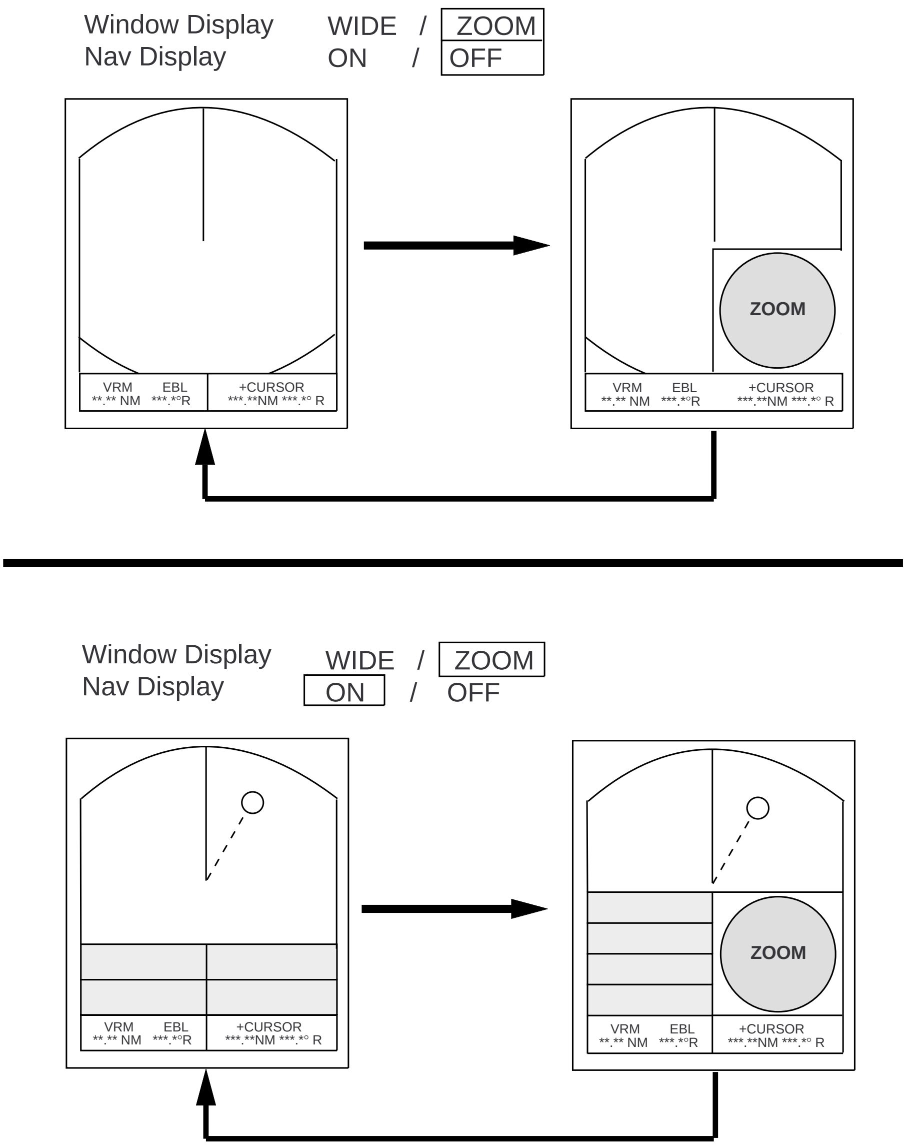

Figure 1-10 Display modes

1.14 The Window Display

The window display appears at the bottom right (or left) 1/4 of the display. Two types of window displays are available: zoom and wide. Zoom doubles the size of the area selected by the operator, and wide (range-up) compresses and displays the entire radar picture on the next higher range.

Note: The zoom display does not function on the 0.125 and 0.25 nm ranges.

Selecting the type of window display

1) Press the [MENU] key.
2) Select Mode & Function and press the [ENT] key.

   Note: When you place the circle cursor behind the window display, the window display shifts left (or right) so you may view the circle cursor.

3) Select Window Display to Zoom or Wide (range-up).
4) Press the [ENT] key followed by the [MENU] key.

Selecting the area for the zoom picture

1) Press the [DISP MODE] key to select the window display. The area selector is a solid circle.
2) Press the cursor pad to place the circle cursor (area selector) on the area to zoom.
3) Press the [ENT] key. The area selector becomes a dashed circle and the cursor can be moved indepedently.

To reselect area to zoom, press [ENT] or [DISP MODE] and follow steps 2 and 3.

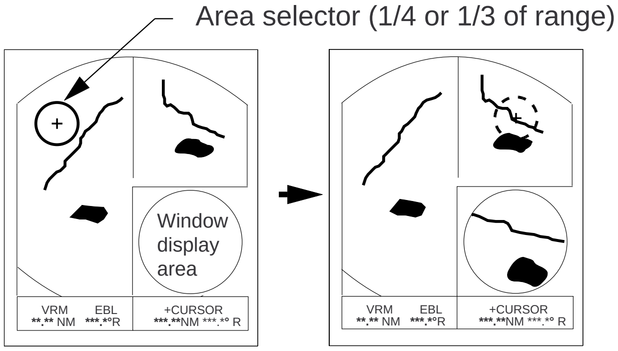

(1) Press [DISP MODE] to select the window display.

(2) Press cursor keys to select area to zoom and press [ENT].

Figure 1-11 How to select the area to zoom

1.15 Guard Alarm

The guard alarm allows the operator to set the desired range and bearing for a guard zone. When ships, islands, landmasses, etc. enter (or exit, depending on type of guard zone in use.) the guard zone an audible alarm sounds to call the operator’s attention. The alarm is very effective as an anticollision aid when using an autopilot or navigating in narrow channels.

⚠ CAUTION

The guard alarm is a useful anti-collision aid, but does not relieve the operator of the responsibility to also keep a visual lookout for possible collision situations. The alarm should never be used as the sole means for detecting possible collision situations.

Selecting guard zone type

The guard alarm can be set to sound on targets entering (guard in) or exiting (guard out) the guard zone. Select type of guard zone as follows.

1) Press the [MENU] key to display the menu.
2) Select Mode & Function and press the [ENT] key.

3) Select Alarm Mode to IN or OUT.

4) Press the [ENT] key followed by the [MENU] key.

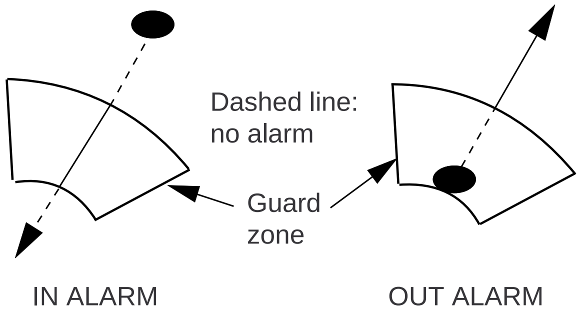

Figure 1-12 In and out alarms

Setting the guard zone

1) Mentally create the guard zone you want to display. See Figure 1-13 (1).

2) Operate the cursor pad to set cursor on top (bottom) left edge of the guard zone. Press the [GUARD] key. *G (IN) (or G OUT)), with asterisk blinking, appears at the top right-hand corner on the display. (The asterisk indicates the guard zone is partially set.) See Figure 1-13 (2).

3) Operate the cursor pad to set cursor on bottom (top) right edge of the guard zone and press the [GUARD] key. The asterisk disappears. See Figure 1-13 (3).

4) Guard zone appears on the display. See Figure 1-13 (4).

Silencing the audible alarm

Any ships, landmasses, etc. coming into (or going out of) the guard zone will trigger the audible alarm and display the guard zone in reverse video. You can silence the alarm by pressing the [GUARD] key. When this is done, G (ACKN) replaces G (IN) (or G (OUT)).

Press the [GUARD] key again to reactivate the alarm. G (IN) (or G (OUT)) replaces G (ACKN).

Canceling the guard zone

Press and hold down the [GUARD] key until the guard zone disappears.

Notes on the guard alarm

- When the radar range is less than one half of the guard zone range, the guard zone disappears from the display and UP RANGE appears. If this happens, raise the range to redisplay the guard zone.
- A target echo does not always mean a landmass, reef, ships or surface objects but can imply returns from sea surface or precipitation. As the level of these returns varies with environment, the operator should properly adjust the STC, gain (sensitivity), A/C RAIN and A/C AUTO to be sure the alarm system does not overlook target echoes.

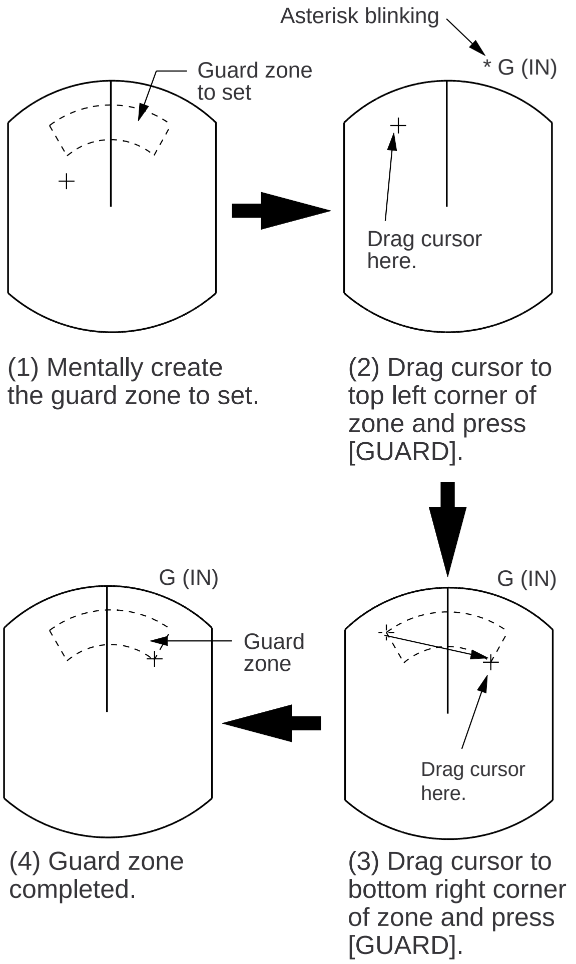

Figure 1-13 How to set a guard zone

1.16 Suppressing Radar Interference

Radar interference may occur when near another shipborne radar operating in the same frequency band as your radar. Its on-screen appearance is many bright dots either scattered at random or in the form of dotted lines extending from the center to the edge of the display. Figure 1-14 illustrates interference in the form of curved spokes. Interference effects are distinguishable from normal echoes because they do not appear in the same place on successive rotations of the scanner.

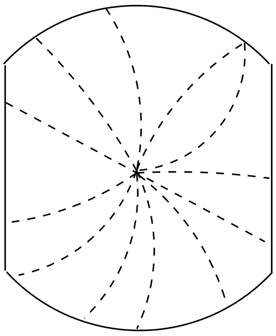

Figure 1-14 Radar interference

Four levels of interference are available, including off: IR1, IR2, IR3 and OFF. IR3 provides the highest level of rejection.

Procedure

1) Press the [MENU] key.
2) Select Int/Noise Rej & ES and press the [ENT] key.
3) Select INT REJECT.
4) Select level desired; 2 provides the greatest degree of interference rejection
4) Press [ENT] and [MENU].

IR and level selected appear at the top right corner on the display when the interference rejection circuit is turned on.

1.17 Suppressing Noise Interference

Noise interference appears on the screen as many bright dots. These dots can be suppressed by turning on the noise rejector. Note however that there are some forms of noise interference which the unit cannot suppress.

Procedure

1) Press the [MENU] key.
2) Select Int/Noise Rej & ES and press the [ENT] key.
3) Select Noise Reject to ON.
4) Press the [ENT] key followed by the [MENU] key.

1.18 Off Centering the Display

Your vessel's position can be shifted anywhere within 75% of the effective display area. The primary advantage of the off centered display is that for any range setting, the view ahead of your vessel can be extended without changing the range or size of targets.

Procedure

1) Locate the cursor where you want the screen center to be.
2) Press the [OFF CENTER] key.

OFF CENTER appears at the top left corner on the display when the display is off centered.

Note: The off centered display is automatically canceled when the [DISP MODE] key is pressed and the range is 64 or 72NM.

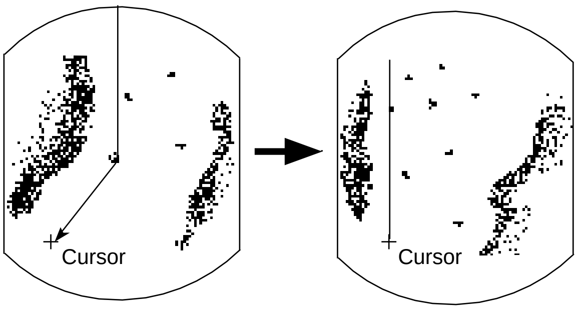

(1) Place cursor where desired.

(2) Press [OFF CENTER] key; cursor location becomes screen center.

Figure 1-15 Off centering the display

1.19 Echo Trails

You can show the trails of targets in afterglow. This function is useful for alerting you to possible collision situations.

Starting echo trail

Press the [TRAIL] key to start the echo trail function. Afterglow starts extending from targets and "TRAIL" and the echo trail time appear at the top right-hand corner of the display. Press the key again within 3 seconds to select a different trail time, among 15 sec, 30 sec, 1 min, 3min, 6 min, 30 min, and continuous. In continuous plotting the time elapsed appears at the top right corner on the display.

Note: If the range is changed, trails are painted anew with the newly selected range.

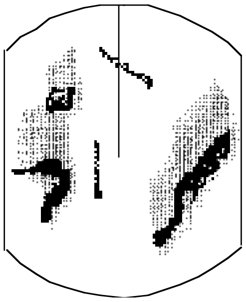

Figure 1-16 Appearance of echo trails

Fixed time trails

When the elapsed time clock counts up to the trail time selected, the elapsed time display freezes. The oldest portions of trails are erased so only the latest trail, equal in length to the trail time selected, is shown. Then, trails start extending again. For example, the one minute trail time is selected. When the elapsed time display freezes at 60 seconds, all but the latest one minute of trails are erased and then trailing continues.

Continuous trail

The maximum continuous trail time is 99 minutes and 59 seconds. When the elapsed time clock counts up to that time the elapsed time display is reset to zero all trails are erased and then trailing is restarted.

Adjusting brilliance of afterglow

The brilliance of the trails' afterglow can be set on the Backlight/Brilliance menu.

1) Press the [MENU] key.
2) Select Backlight/Brilliance and press the [ENT] key.
3) Select Echo Trails.
4) Select brilliance.
5) Press the [ENT] key followed by the [MENU] key.

Canceling echo trails

Press the [TRAIL] key to erase the TRAIL indication.

1.20 The Navigation Data Display

Navigation data can be displayed at the screen bottom if the unit receives navigation input in NMEA 0183 format. Navigation data include

- position in latitude and longitude or Loran-C time differences (TDs)
- bearing and range to a waypoint selected on the navigator
- cross track error (XTE—the amount in nautical miles and the direction the vessel if off course)
- depth
- speed.

If the navigation data include the destination data, waypoint position is denoted on the screen by a dashed ring.

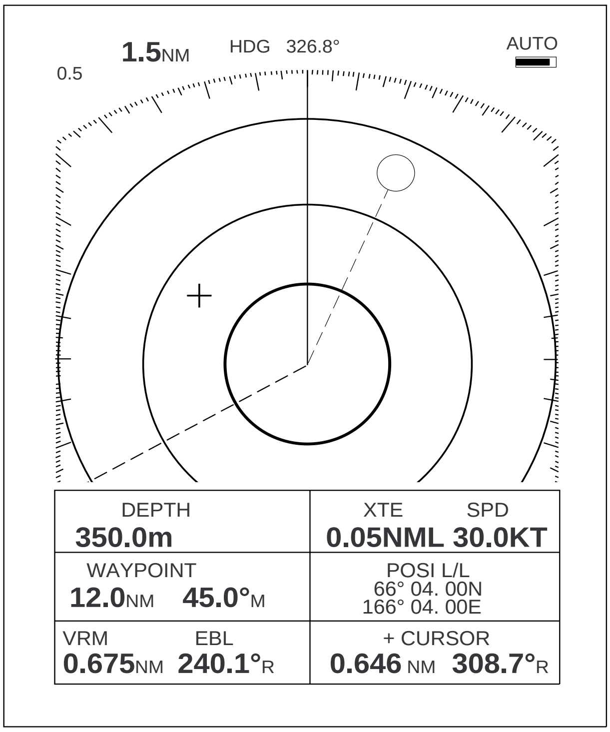

Figure 1-17 Sample nav data display

Setting up the nav data display

1) Press the [MENU] key.

2) Select Nav Data and press the [ENT] key.

• NAV DATA MENU •

Select item and option
by ▲▼ keys.

1. Navigator	ALL **GPS** LC
2. Nav Data Disp	**OFF** ON
3. Pos Disp Mode	**L/L** TD
4. Depth Unit	**M** FA FT
5. Temp Unit	**°C** °F
6. STBY Display	**NORM** NAV

Press HM-OFF to temporarily
hide menu.

<Press MENU for main menu.>

Figure 1-18 Nav data menu

3) Select Navigator; GPS, Loran C or ALL (Select all if several navigators are connected to the unit. In this case, position data is selected in order of GPS, Loran C and other.)

4) Select Nav Data Disp to OFF or ON.

5) Select Pos Disp Mode to L/L (latitude and longitude or TD (Loran C).

6) Select unit of depth measurement to meters, fathoms, or feet.

7) Select unit of measurement for water temperature to Centigrade or Fahrenheit.

8) Select whether to display nav data or "ST-BY". "NORM" for stand-by; NAV for navigation data.

9) Press the [ENT] key followed by the [MENU] key.

1.21 Echo Stretch (magnifying long range echoes)

Normally, the reflected echoes from long range targets appear on the display as weaker and smaller blips even though they are compensated by the internal circuitry. To stretch long range echoes, in the range direction, turn on the echo stretch function.

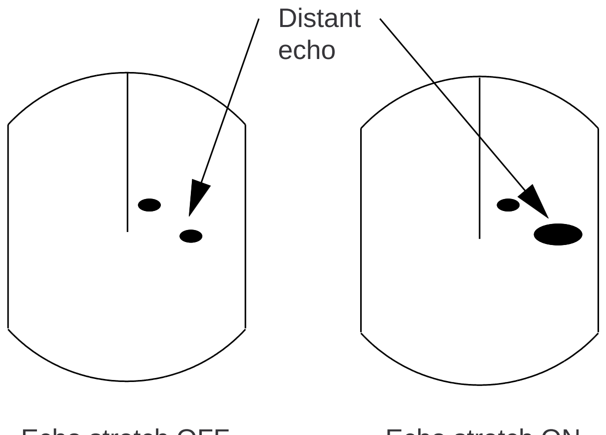

Figure 1-19 Echo stretch

Turning echo stretch on or off

1) Press the [MENU] key.
2) Select Int/Noise Rej & ES and press the [ENT] key.
3) Select Echo Stretch.
4) ON or OFF.
5) Press the [ENT] key followed by the [MENU] key. ES appears at the top right side on the display when the echo stretch feature is on.

Note 1: This function magnifies not only targets but also sea clutter and radar interference. For this reason be sure the controls for adjustment of sea clutter and radar interference are properly adjusted before activating the echo stretch.

Note 2: Echo stretch is inoperative on ranges from 0.25 to 0.75 nautical miles. ES appears in reverse video when you try to turn on the echo stretch in those ranges.

Note 3: When turning on the echo stretch, the interference(level 3) and noise rejector rejectiors are automatically turned on to remove interference and noise. They may be turned off if there function is not needed.

1.22 Selecting Unit of Measurement for Range

The unit of measurement for the VRM and cursor can be nautical miles, kilometers, or statute miles. You may select unit desired as follows.

1) Press the [MENU] key.
2) Select Mode & Function and press the [ENT] key.
3) Select VRM Unit to nm, km, or sm.
4) Press [ENT] followed by [MENU] key.

1.23 Selecting Bearing Reference

Bearing can be displayed relative to north (relative bearing) or relative to true north (true bearing) as follows. (True bearing requires heading sensor input.)

1) Press the [MENU] key.
2) Select Mode & Function and press the [ENT] key.
3) Select EBL Ref.
4) Select Rel(ative) or True.
5) Press the [ENT] key followed by the [MENU] key.

1.24 Erasing the Heading Marker

The heading marker continuously appears on the display and shows your vessel's heading. When this mark obscures a target echo, you can temporarily erase it by pressing and holding down the [HM OFF] key. Release the key to redisplay the marker.

1.25 Deselecting Ranges

The unit has 14 ranges, some which you may not require. You can deselect up to eight ranges as follows.

1) Press the [MENU] key.
2) Select Mode & Function and press the [ENT] key.
3) Select Range and press the [ENT] key. Active ranges appear in reverse video.
4) Press ◀ or ▶ to select range to disable (or enable). Current selection is underlined.
5) Press [ENT].
6) Repeat steps 4 and 5 to disable (or enable) other ranges.
7) When finished, press the [MENU] key.

1.26 Displaying Navigation During Stand-by

Various navigation data can be displayed during stand-by. A barometer is built in the unit; atmospheric pressure appears, in graph form, on the navigation dat display during stand-by. If your navigation aid can output data in NMEA 0183 format, your vessel's position in latitude and longitude, the range and bearing to waypoint, speed, course, date, time and cross track error may be input to the unit, and be seen in the bottom text area during stand-by. Further, with video sounder input, depth may be displayed, both digitally and in graph form.

Procedure

1) Press the [MENU] key.
2) Select the Nav Data menu and press the [ENT] key.
3) Select STBY Display to NAV and press the [ENT] key.
4) Press the [MENU] key.

Note: The depth display scale changes automatically with depth and the maximum depth is 1,000 meters. Further the unit of depth measurement is fixed to meters.

⚠ CAUTION

The barometer and depth displays are intended as reference. Any data displayed by them should be used with extreme caution.

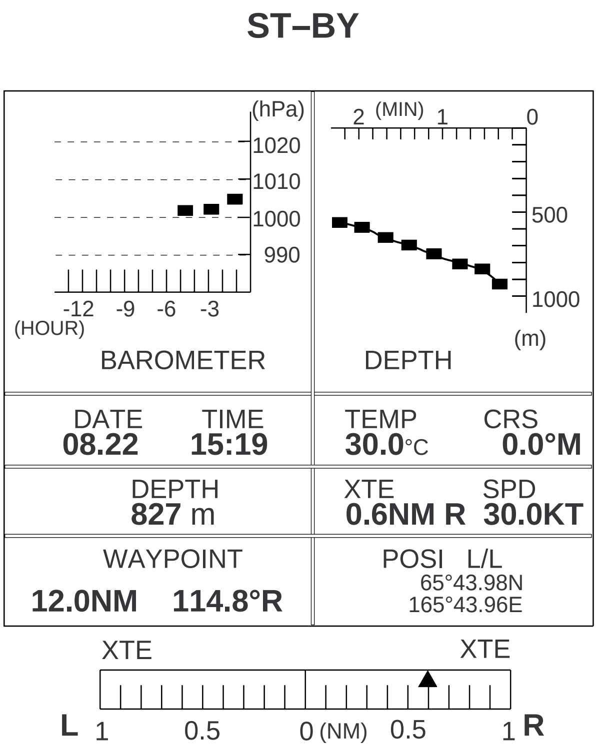

Figure 1-20 Navigation data display during stand-by

1.27 Outputting Cursor Position to Navigator

Cursor position (NMEA0183 data sentence TLL) can be output to the navigator by pressing and holding down the [HM OFF] key.

1.28 Displaying Cursor Position, Range and Bearing to Cursor

The cursor data indication at the bottom of the display can show cursor position in latitude and longitude or the range and bearing from own ship to the cursor. You can select the indication desired by pressing the [HM OFF] key.

1.29 Visual Alarm Indications

The unit displays various visual alarms to alert you to error.

Table 1-1 Visual alarm indications

Error	Visual alarm
No heading pulse	HD SIG MISSING
No bearing pulse	BP SIG MISSING
Heading signal turned off	***.* (appears as heading)

The heading signal visual alarm may be cleared by pressing the [DISP MODE] key.

2. INTERPRETING THE DISPLAY

As an aid to navigation, radar can be a very valuable tool. No other electronic navigation aid can give you the ability to spot vessels coming at you in the fog, or tell you the location of the inlet to the harbor in the pitch black of night.

To help you understand what your radar can (and cannot) do for you this chapter covers

- the characteristics of the radar wave
- target properties and radar wave reflection
- range and bearing resolution, and
- false echoes.

2.1 The Radar Wave and Radar Horizon

How the radar wave travels

The radar wave tends to travel in straight lines at the speed of light. However, it is subject to bending or refraction in the atmosphere, the amount depending on region and density.

Super-refraction

Super-refraction is a condition in which there is an upper layer of warm dry air over a surface layer of cold, moist air. Radar waves bend downward and thus increase the ranges at which targets may be detected.

Sub-refraction

Sub-refraction is the reverse condition of super-refraction; a layer of cold air is above a layer of warm air. Radar waves bend upward and thus decrease the ranges at which targets may be detected.

Radar horizon

Radar is essentially a "line-of-sight" phenomenon. That means you have just about the same range to horizon with a radar as you do with your own eyes. However under normal atmospheric conditions, the radar horizon is 6% greater than the optical horizon. Therefore, if the target does not rise above the horizon the radar beam cannot be reflected from the target.

The distance to the horizon from the scanner, under normal conditions, is calculated by the following formula.

$$Rmax = 2.2 \times \sqrt{h_1} + \sqrt{h_2}$$

Where Rmax: Radar horizon (mile), h1: Antenna height (meters), h2: Target height (meters)

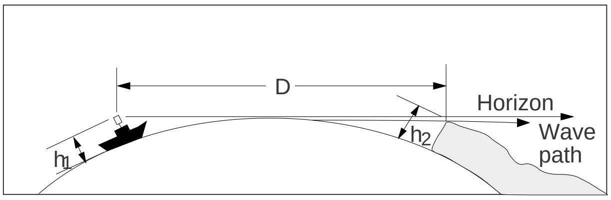

Figure 2-1 Radar horizon

2.2 Target Properties and Radar Wave Reflection

Generally, larger targets can be seen on the radar display at greater ranges, provided line-of-sight exists between the scanner and target. However, a large target with poor reflecting properties may not be detected as easily as a smaller target with better reflecting properties. For example, you might expect a lighthouse to be a good radar target because of its size. In actuality the return echo is weak since the conical shape diffuses most of the radiated energy.

A ship whose hull is made of conducting materials, such as steel, will return a relatively strong echo.

On the other hand, hulls made from wood or fiberglass return much weaker echoes.

Vertical surfaces, such as a cliff, are good targets provided they face the radar. Conversely, horizontal and smooth surfaces such as mudbanks, sandy beaches, and gently sloping hills make poor targets because they disperse rather than reflect most of the energy that strikes them.

The strongest radar echoes known come from built-up areas, docks, etc., because these targets are less subject to changes in aspect. These types of targets have three flat, smooth surfaces mutually at right angles. Some radar buoys are arranged this way so as to deliberately increase their detection range.

2.3 Range Resolution

Range resolution is a measure of the capability of a radar to display as separate pips the echoes received from two targets which are on the same bearing and are close together.

The main factor which affects range resolution is pulselength. Two targets on the same bearing, close together, cannot be seen as two distinct echoes on the display unless they are separated by a distance greater than one-half the pulselength.

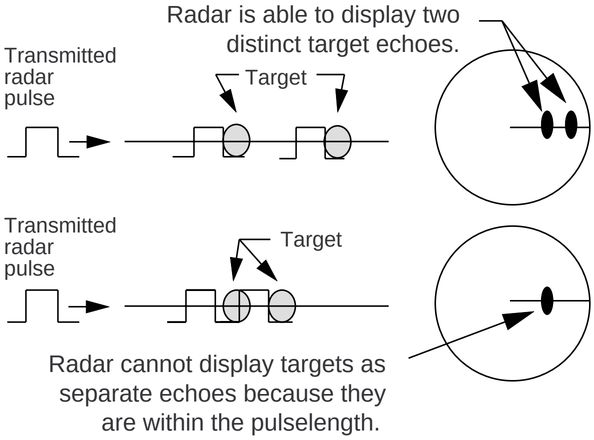

Figure 2-2 Range resolution

2.4 Bearing Resolution

Bearing resolution is a measure of the capability of a radar to display as separate targets the echoes received from two targets which are at the same range and are close together.

The principal factor which affects bearing resolution is horizontal beamwidth. Two targets at the same range must be separated by more than one beamwidth to appear as separate pips.

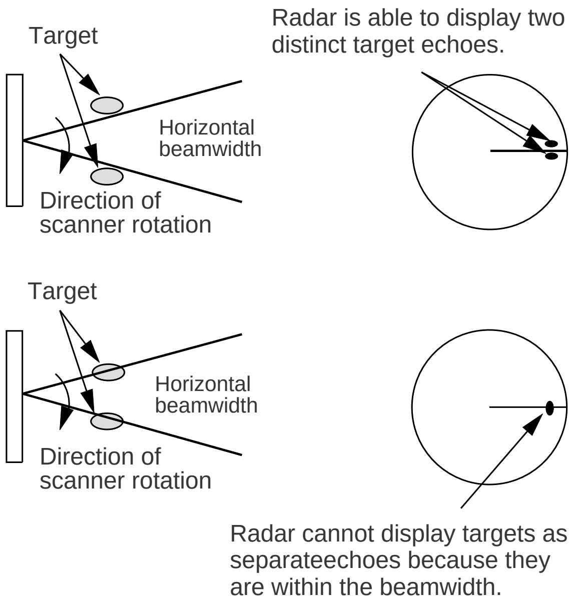

Figure 2-3 Bearing resolution

2.5 False Echoes

Occasionally false echoes appear on the screen at positions where there is no target. In some cases the effects can be reduced or eliminated. The operator should familiarize himself or herself with the appearance and effects of these false echoes, so as not to confuse them with echoes from legitimate contacts.

Multiple echoes

Multiple echoes occur when a short range, strong echo is received from a ship, bridge, or breakwater. A second, a third or more ech-

oes may be observed on the display at double, triple or other multiples of the actual range of the target as shown in Figure 2-4. Multiple reflection echoes can be reduced and often removed by decreasing the sensitivity or properly adjusting the STC.

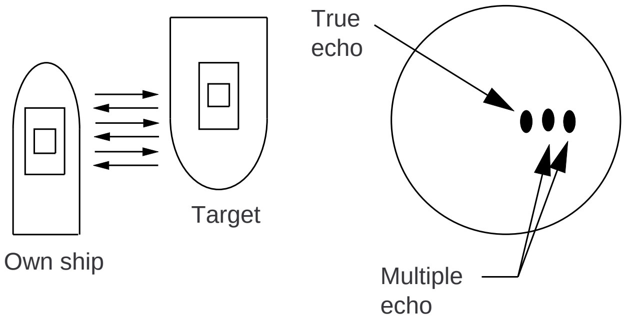

Figure 2-4 Multiple echoes

Side-lobe echoes

Every time the scanner rotates, some radiation escapes on each side of the beam—called "side-lobes." If a target exists where it can be detected by the side-lobes as well as the main-lobe, the side-lobe echoes may be represented on both sides of the true echo at the same range, as shown in Figure 2-5. Side-lobes show usually only at short ranges and from strong targets. They can be reduced through careful reduction of the sensitivity or proper adjustment of the STC.

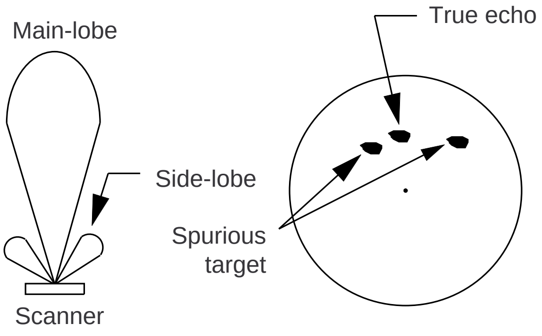

Figure 2-5 Side-lobe echoes

Indirect echoes

Indirect echoes may be returned from either a passing ship or returned from a reflecting surface on your own ship, for example, a stack. In both cases, the echo will return from a legitimate contact to the antenna by the same indirect path. The echo will appear on the same bearing of the reflected surface, but at the same range as the direct echo. Figure 2-6 illustrates the effect of an indirect echo. Indirect echoes may be recognized as follows:

- they usually occur in a shadow sector
- they appear on the bearing of the obstruction but at the range of the legitimate contact
- when plotted, their movements are usually abnormal, and
- their shapes may indicate they are not direct echoes.

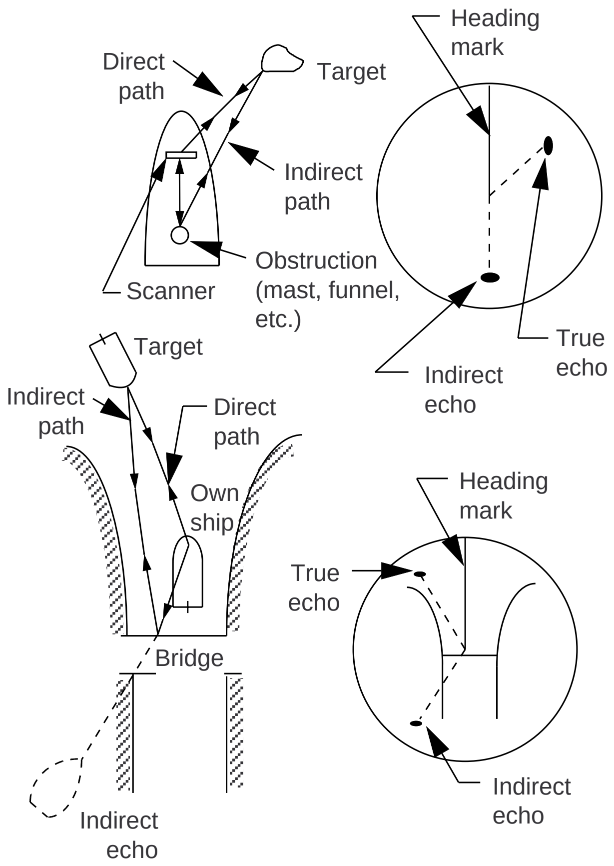

Figure 2-6 Indirect echoes

Blind and shadow sectors

Funnels, stacks, masts, or derricks in the path of antenna may reduce the intensity of the radar beam. If the angle subtended at the scanner is more than a few degrees a blind sector may be produced. Within the blind sector small targets at close range may not be detected while larger targets at much greater ranges may be detected. See Figure 2-7.

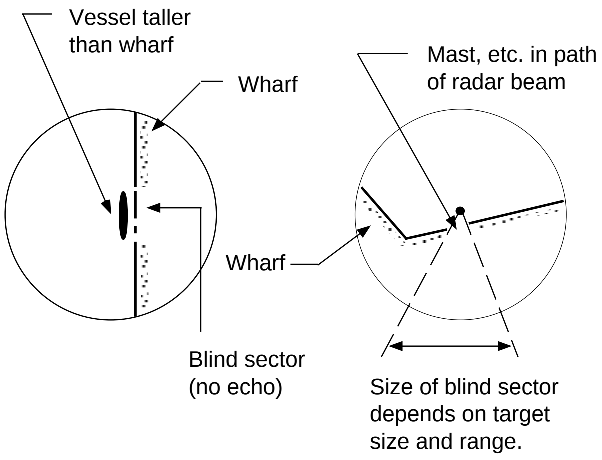

Figure 2-7 Blind and shadow sectors

2.6 Nautical Chart and Radar Picture

Under normal conditions, a picture which is similar to a nautical chart can be obtained on the radar display. However, a radar cannot:

- show targets which are below the horizon.
- show a target which is hidden by a larger one.
- see around corners (for example, seawall).
- distinguish between two targets which are very close together, either in range or bearing. For example, a vessel towing another will probably appear as one vessel, as both will be covered by the beam at the same time.

The nautical chart and radar picture shown in Figure 2-8 are from the Kada Inland Sea in southwestern Japan.

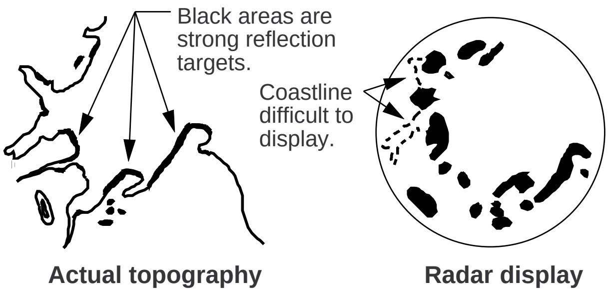

Figure 2-8 Nautical chart and associated radar picture

3. MAINTENANCE & TROUBLESHOOTING

This chapter tells you how to keep your radar in good working order. Before reviewing this chapter please read the safety information which follows.

3.1 Safety Information

⚠ WARNING

Hazardous voltages. Can shock, burn or cause death.

Only qualified personnel should work inside the units of the radar.

ELECTRICAL SHOCK HAZARD

This equipment uses high voltage electricity which can shock, burn or cause death. While the equipment has been designed with consideration for the operator's safety, precautions must always be exercised when reaching inside the equipment for the purpose of maintenance or service. For this reason, only qualified personnel totally familiar with electrical circuits and service manual should work inside the display unit or scanner unit.

RF RADIATION HAZARD

The radar scanner emits high frequency radio radiation which can be harmful, particularly to your eyes. Never look directly into the scanner from a distance of less than two feet when the radar is in operation as you could injure the cornea of your eyes. Always make sure the radar is set to stand-by or is turned off before starting work on the scanner unit.

Turn off the power before performing any maintenance or troubleshooting procedure.

3.2 Preventative Maintenance

Regular maintenance is important for good performance. Always keep the equipment as free as possible from dirt, dust, and water splashes. Make sure all screws securing the components are properly tightened.

A maintenance program should be established and should at least include the items listed in Table 3-1.

3.3 Replacing the Fuse

The 5A fuse in the power cable protects the equipment against reverse polarity of ship's mains, overcurrent, and equipment fault. If the fuse blows, find the cause before replacing it. Never use a fuse rated for more than 5A–serious damage to equipment may result and void the warranty.

Table 3-1 Recommended maintenance program

Period	Item	Check point	Remarks
3 to 6 months	LCD	The LCD will, in time, accumulate a coating of dust which tends to dim the picture. Wipe LCD lightly with a soft cloth.	Do not use chemical cleaners to clean any part of the display unit; they can remove paint and markings.
6 months to 1 year	Display unit connectors	Check for tight connection and corrosion.	If corroded, contact your dealer for replacement.

3.4 Troubleshooting

Table 3-2 contains simple troubleshooting procedures which you can follow to try to restore normal operation. If you cannot restore normal operation, do not attempt to check inside any unit of the radar system. Any repair work is best left to a qualified technician.

Table 3-2 Troubleshooting table

If...	But...	Then...
you pressed the [POWER] key to turn on the radar	the control panel does not light	• try adjusting the control panel backlighting on the Brilliance/Backlighting menu. • battery may have discharged. • check fuse in power cable.
	nothing appears on the display or display contrast is poor	• try adjusting the tone. (Extreme ambient temperature may affect display tone.)
	characters are distorted	• request service.
the radar has warmed up and you pressed the [ST-BYTX] key to transmit	characters and indications are abnormal	• have a qualified technician check the set.
you have adjusted the gain with A/C AUTO and STC off	neither noise nor targets appear (indications and markers do)	• check signal cable for damage.
	neither indications nor markers appear (noise and targets do)	• check signal cable for damage.
	the sweep (radial line sweeping around the display) is not synchronized with antenna rotation	• the problem may be in the antenna unit. Request service.
	there is no change in sensitivity.	• request service.
a key is pressed	nothing happens	• key may be faulty. Request service.

3.5 Self Test

The self test facility checks the keyboard, ROM and RAM for proper operation. You may run the test as follows.

1) Press the [MENU] key.

2) Select Self Check. The following display appears.

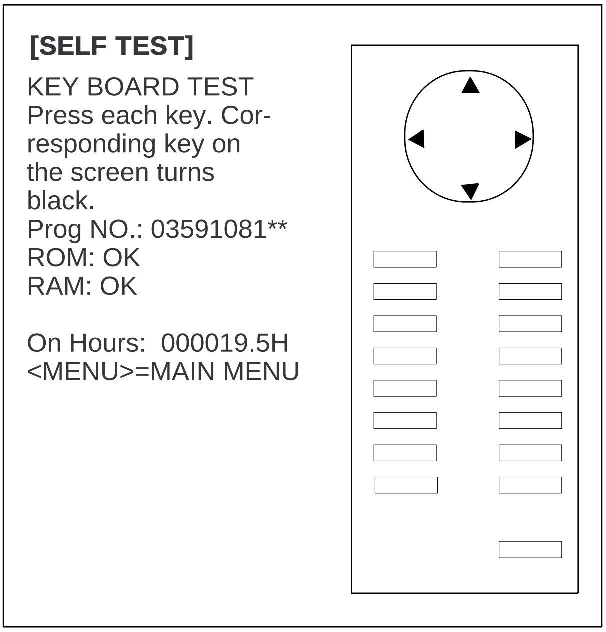

Figure 3-1 Self test screen

3) To check the keyboard, press a key. Its corresponding location on the display lights in black if the key is operating properly.

4) To escape the test, press the [MENU] key.

The ROM and RAM are automatically checked. If NG (No Good) appears to the right of ROM or RAM indication, contact your dealer for advice.

4. INSTALLATION

NOTICE

The installation of this equipment requires certain electrical and mechanical skills. If the owner of the equipment has doubts about his or her technical abilities, we recommend that the equipment be installed by a qualified technician.

4.1 Mounting Considerations

When selecting a mounting location for the unit keep in mind the following points.

- The unit is designed and constructed to be splashproof, thus it can be installed outdoors. You can even hose it down after a day's outing. If it is to be installed outdoors, we recommend installing it an enclosed cabinet, for maximum protection against the marine environment.
- The temperature and humidity of the mounting location should be stable and moderate. No LCD can provide adequate contrast if the ambient temperature is too extreme.
- The unit consumes only a moderate amount of power, so there is no need for forced air ventilation. However, you should provide adequate space behind and around the unit to permit circulation of air and to provide convenient access to the rear connectors.
- Even though the picture is quite legible even in bright sunlight, keep the display unit out of direct sunlight or at least shaded because of heat that can build up inside the cabinet.
- Locate the unit in a position where you can view and operate it conveniently but where there is no danger of salt or fresh water spray or immersion.
- The orientation of the unit should be so the screen is viewed while the operator is facing in the direction of the bow. This makes determination of your position much easier.
- Make sure you allow enough clearance both to get to the connectors behind the unit and to allow you to get your hands in on both sides to loosen or tighten the mounting knobs. Make sure you leave at least a foot or so of "service loop" of cables behind the unit so it can be pulled forward for servicing or easy removal of the connectors.
- A magnetic compass will be affected if placed too close to the unit. Observe the minimum compass safe distances to prevent deviation of a magnetic compass: standard compass, 0.7 meters, and standard compass, 0.5 meters.

4.2 Mounting Procedure

The unit is designed to be mounted on a tabletop.

1) Using the hanger as a template, mark screw locations in the mounting location.

2) Fix the hanger to the mounting location with four M6 tapping screws (supplied).

3) Fit the knob bolts to the unit.

4) Install the unit in the hanger.

5) Tighten the knob bolts securely.

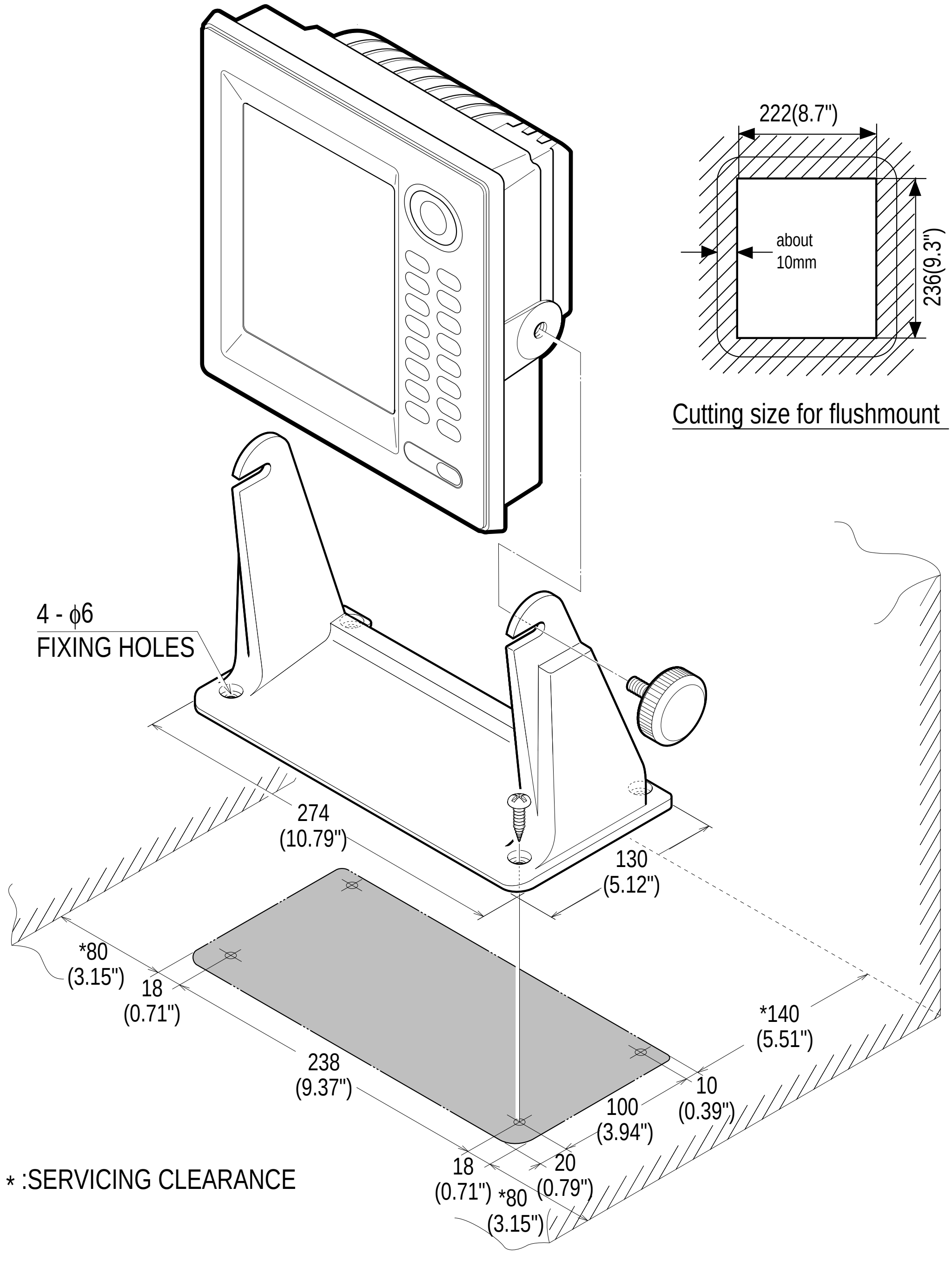

Figure 4-1 How to mount the unit

4.3 Connections

Connect the signal and power cables, the ground wire and optional equipment as shown in Figure 4-2.

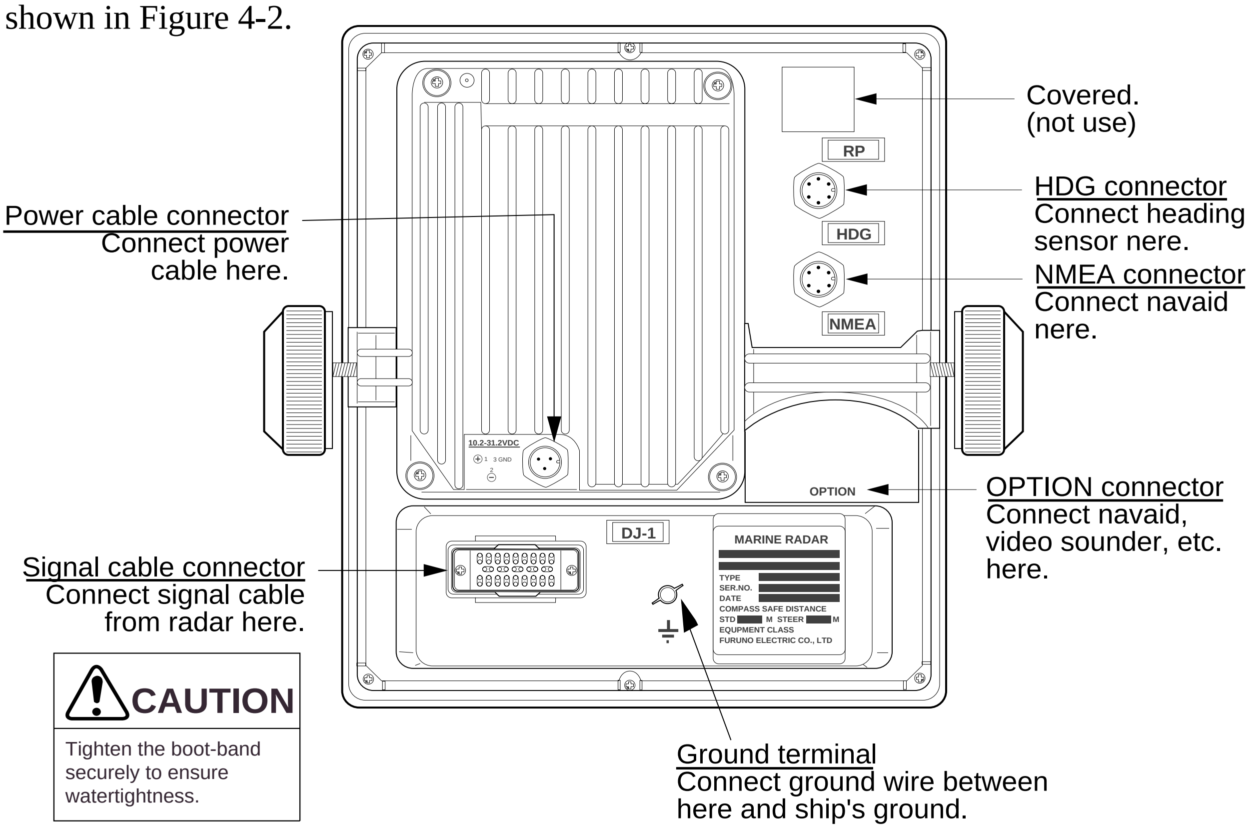

CAUTION

Tighten the boot-band securely to ensure watertightness.

See page 34.

Figure 4-2 Display unit, rear view

Radar connection

The unit can be connected to the following radars.

Radar (Log Amplifier)	P.C. Board	Connector
MODEL 1831	SPU9096	J60
MODEL 1931	SPU9096	J60
MODEL 1941	SPU9096	J60
MODEL 1833C, 1933C, 1943C	19P1001	J109
MODEL 1833, 1933, 1943	03P9288	J105
FR-7041 series	SPU9096	J60
FR-1400 series FCR-1400 M3 series	INT9028	J442 or J443
FR-1400 series	SPU9028	J442 or J443
FR-1500 M2 series	03P9159	J204
FR-2000 series	03P7133 (MBD)	J478 or J479
FR-2100 series	INT9113	J442 or J443
FR-8051/8111/8251	03P9159	J204

For the Connection to FR-7040R/7041R and MODEL 1941R, change R48 located near T1 from 12K ohms to 8.2K ohms on SPU-9180.

Radar (Linear Amplifier)	P.C. Board	Connector
MODEL 1941R	SPU9096	J60
FR-7041R	SPU9096	J60
FR-1400A series	INT9028	J442 or J443
FR-8000 series	03P7530 (INT)	J21
MODEL 821/841*	SPU9180	J58

*: Use XH8P connector assembly supplied; Cut out NH connector. Solder green wire to coaxial cable and orange wire to shield.

Connection of Model 1833(C), 1933(C), 1943(C)

Fabricate the interconnection cable (03S9298, 03S9299, 03S9318) as shown below. Connect the NH connector referring to the appropriate installation manual.

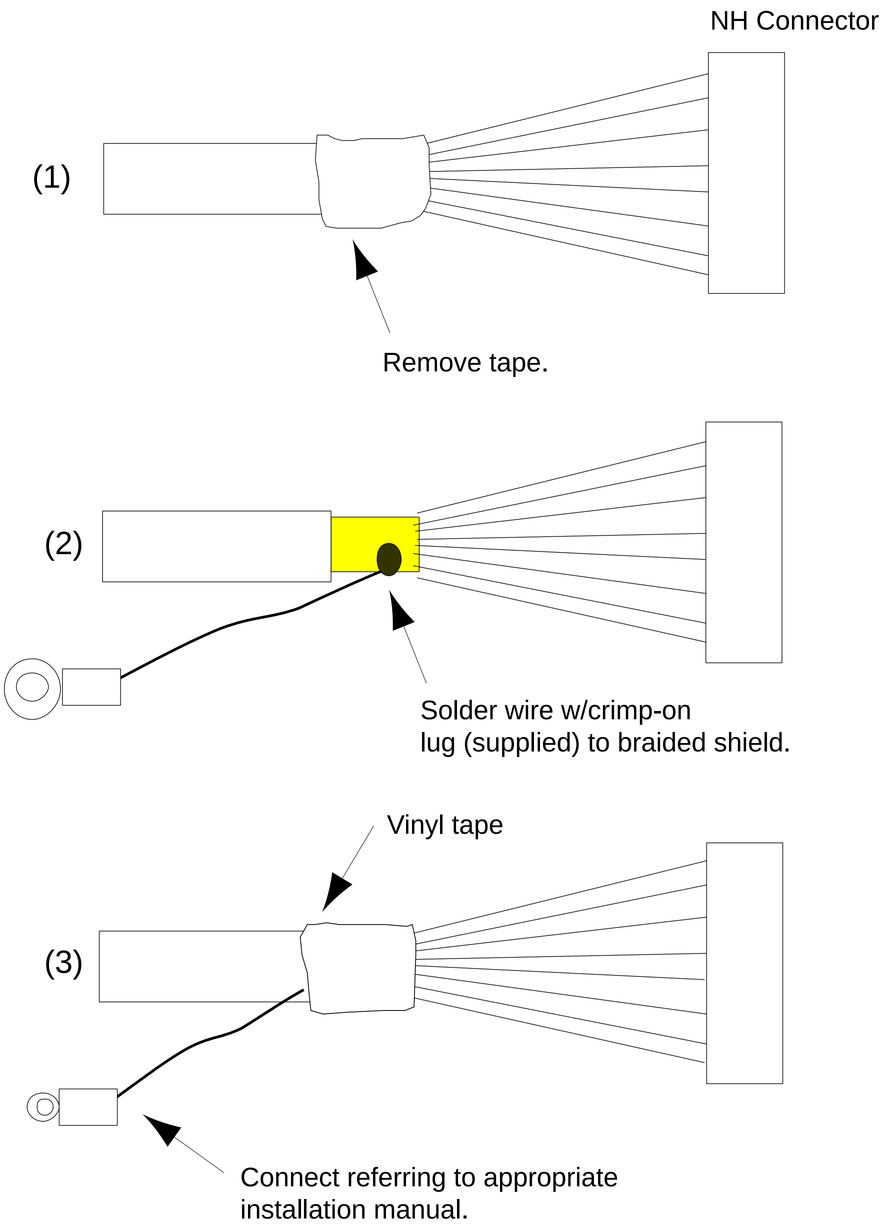

Navigation aid, video sounder connection

If your navigation aid can output data in NMEA 0183 data format, your vessel's position in latitude and longitude, the range and bearing to waypoint, speed, and course may be input to this radar, and be seen in the bottom text area.

Further, if your video sounder can output depth in NMEA 0183 data format, depth can be displayed on the navigation data displayed in graph form during stand-by.

You will need an NMEA cable:

For navaid;

Type	Code no.	Remarks
MJ-A6SPF0012-050	000-134-424	6P-6P (5 m)
MJ-A6SPF0012-100	000-133-817	6P-6P (10 m)

For E/S;

Type	Code no.	Remarks
MJ-A6SPF0011-050	000-132-244	6P-4P (5 m)
MJ-A6SPF0011-100	000-132-336	6P-4P (10 m)

Two NMEA connectors are provided at the rear of the display unit: the NMEA connector and the OPTION connector.

Heading Sensor Connection

Heading Signal is connected to "HDG" connector. Gyro signal is connected thru A/D Converter AD-100.

Type	Code no.	Remarks
MJ-A6SPF0007-100	000-125-237	for C-2000
MJ-A6SPF0009-100	000-125-236	for AD-100

The OPTION connector

To connect external equipment to the OPTION connector;

1) Remove the plastic cover on the connector.

2) Connect equipment to J61 on the SPU Board as shown in Figure 4-3.

3) Cover signal cable at junction with display unit with silicone sealant.

Note: To receive data from more than two external equipment (for example, GPS and echosounder), use an external mixing device.

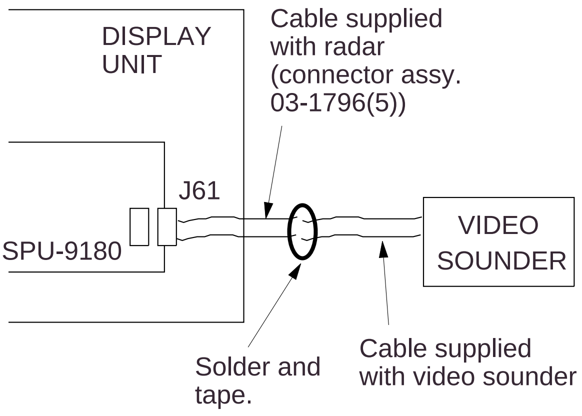

Figure 4-3 How to connect external equipment to the OPTION connector

Distribution NAV data to the other equipmet

FMD-811 can output NAV data received from a navaid to an echosounder or video plotter by making the modifications as below.

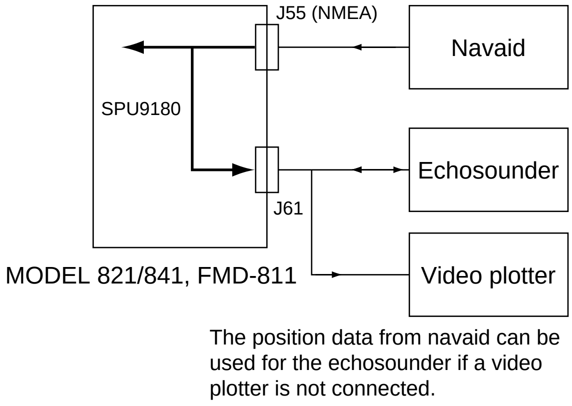

Procedure

1. Unfasten the nuts fixing the waterproof connector to remove the covers of the power and display unit.

2. Remove all connectors from SPU Board (SPU-9180).

3. Unfasten three screws to remove the board.

4. Remove JP3, R91 and R92 on the parts side of SPU Board.

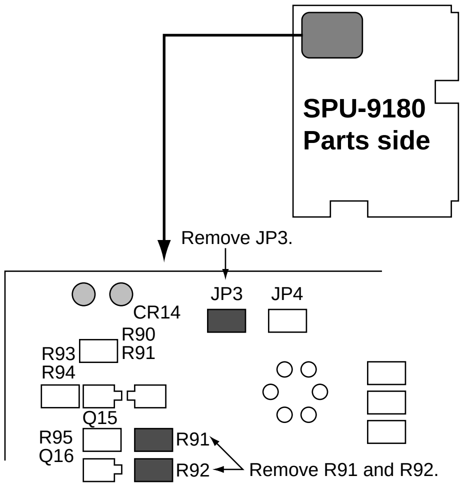

5. Add jumper wire between J55 pin #3 (RXD-H) and J61 PIN #1 (TXD-H).

6. Add a jumper wire between J55 pin #4 (RXD-C) and J61 pin #5 (SHIELD).

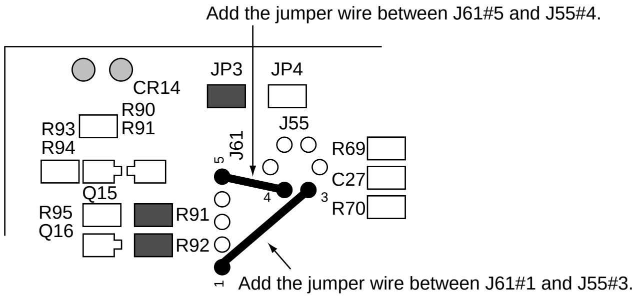

7. Connect the NMEA cable to the connector assy (03-1796/5P, supplied with radar) as shown in the figure below.

8. Connect the 5P connector to J51 on SPU Board.

9. Replace the covers removed in step 1.

10. Connect navaid and other equipment to radar.

11. Turn on FMD-811 and confirm that NAV data in properly received at the radar and external equipment.

4.4 Installation Check List

After completing the installation it is a good idea to check for proper installation. Follow the checklist below and tick boxes to show proper completion.

- ❒ Are the connections to the battery of correct polarity?
- ❒ Is the unit grounded?
- ❒ Are all connectors at the rear of the display unit fastened securely?

CAUTION

If it is necessary to open the display unit, be sure the rear cover is fitted to the front chassis properly when closing the rear cover. When reassembling, first turn off the unit and then press the center of the rear cover to plug in the multipin connector on the rear cover.

4.5 Initial Adjustment of Picture

Follow the procedure below to obtain proper radar picture.

1) Press the [POWER] key on the display unit. The display should light.

2) Press [TX ST-BY] key to display radar

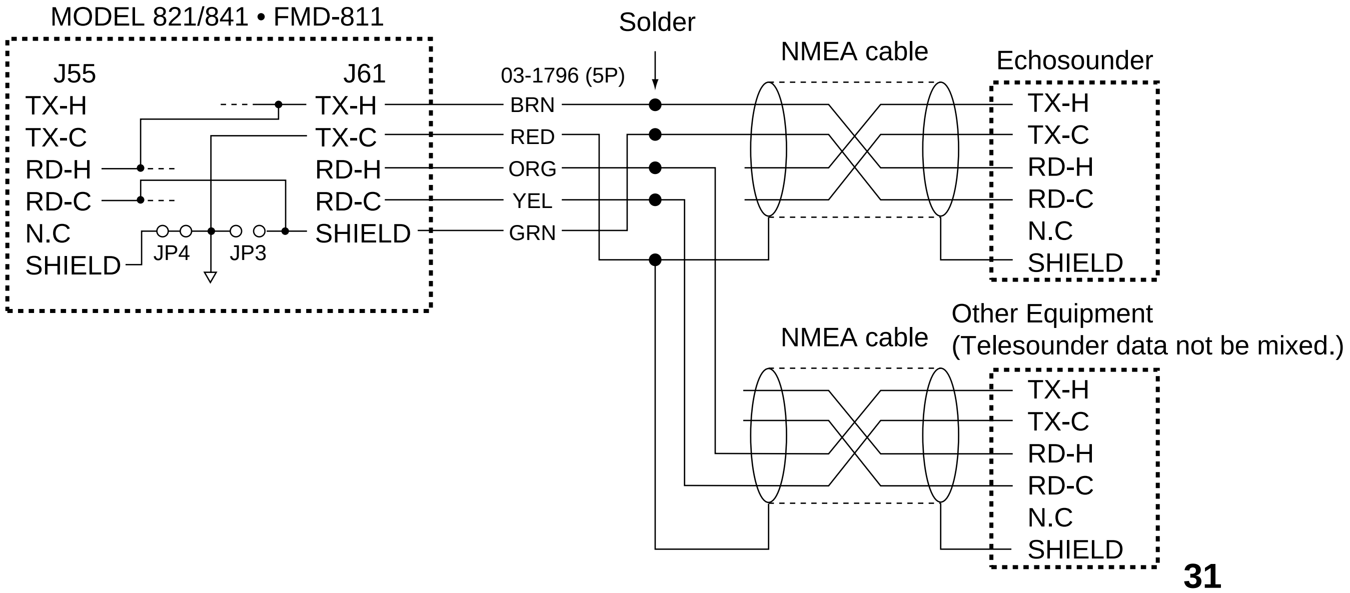

picture.

3) Press the [ECHO] key. The following display appears.

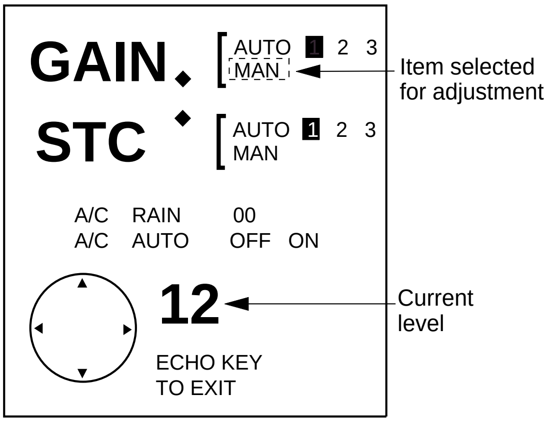

Figure 4-4 Display for adjustment of gain, STC (A/C SEA), A/C RAIN

4) Press the cursor pad to select GAIN-AUTO, if it is not already selected.

5) Select minimum range. Press the [ECHO] key and press the cursor pad to select STC-AUTO, if it is not already selected.

Note: When the unit is connected to the radar having a linear amplifier, the radar picture may not be adjusted through the menu.

4.6 Displaying the Installation Menus

Two sets of installation menus, Installation Setup 1 and Installation Setup 2 enable entry of initial settings and adjustment of the radar picture.

Procedure

1) Turn on the power while pressing and holding down the [HM OFF] key.

2) Press the [MENU] key.

● MAIN MENU ●

Select item by ▲▼ keys
and press ENT key.
1. Backlight/Brilliance
2. P/L, IR, NR & Radar Mode
3. Nav Data
4. Mode & Function
5. Self Check
6. Installation Setup 1

Press HM-OFF to temporarily
hide menu.

<Press MENU key to escape.>

Figure 4-5 main menu

3) Press the cursor pad to select Installation Setup 1 and press the [ENT] key.

● INSTALLATION SETUP 1 ●

Select item and option
by ▲▼ keys.
1. Key Beep OFF **ON**
2. Hdg Sensor MAG **GYRO**
3. Demo Display **OFF** ON
4. Ant. Height LOW **MED** HIGH
5. Installation Setup 2

Press HM-OFF to temporarily
hide menu.

<Press MENU for main menu.>

Figure 4-6 Installation setup menu 1

4) To display the Installation Setup 2 menu, press the cursor pad to select Installation Setup 2.

● INSTALLATION SETUP 2 ●

Select item and option
by trackball.
1. Align Heading
2. Adjust Sweep Timing
3. On Hours 000019.8 H

Press HM-OFF to temporarily
hide menu.

<Press MENU for main menu.>

Figure 4-7 Installation setup 2 menu

4.7 Entering Initial Settings

1) At the Installation Setup 1 menu, press the cursor pad to select Key Beep. (Key Beep turns on or off the buzzer which sounds when a key is pressed.)

2) Press the cursor pad to select OFF or ON.

3) Press the [ENT] key.

4) Select Hdg Sensor.

5) Select type of heading sensor connected to the unit; MAGnetic compass or GYRO compass.

6) Press the [ENT] key.

7) Select Ant. Height.

8) Select antenna height: LOW; <3 m, MID; 3-6 m and HIGH; >6 m.

9) Press the [ENT] key.

Leave the menu open to complete the next several adjustments.

4.8 Relative Bearing Alignment

You have mounted the antenna unit facing straight ahead in the direction of the bow. Therefore, a small but conspicuous target dead ahead visually should appear on the heading mark (zero degrees).

In practice, you will probably observe some small error on the display because of the difficulty in achieving accurate initial positioning of the antenna unit. The following adjustment will compensate for this error.

1) Identify a suitable target (for example, ship or buoy) at a range between 1/8 to 1/4 miles, and orient the ship's heading to the target dead ahead. To minimize error, keep echoes in the outer half of the picture by changing the range.

2) Display the Installation Setup 2 menu.

```
● INSTALLATION SETUP 2 ●
Select item and option
by trackball.
1. Align Heading
2. Adjust Sweep Timing
3. On Hours  000019.8 H

. . . . . . . . . . . . . . . . . . .
Press HM-OFF to temporarily
hide menu.

<Press MENU for main menu.>
```

Figure 4-8 Installation setup 2 menu

3) Select Align Heading and press the [ENT] key.

4) Press the cursor pad to bisect the target selected at step 2 with the EBL.

5) Press the [ENT] key.

6) As a final test, move the boat towards a small buoy and confirm that the buoy shows up dead ahead on the radar when it is visually dead ahead.

4.9 Sweep Timing

This adjustment ensures proper radar picture, especially on short ranges. The radar measures the time required for a transmitted echo to travel to the target and return to the source. The received echo appears on the display based on this time. Thus, at the instant the transmitter is fired, the sweep should start from the center of the display (sometimes called sweep origin.)

A trigger pulse generated in the display unit goes to the antenna unit through the signal cable to trigger the transmitter (magnetron). The time taken by the signal to travel up to the antenna unit varies, depending largely on the length of signal cable. During this period the display unit should wait before starting the sweep. When the display unit is not adjusted correctly, the echoes from a straight local object (for example, a harbor wall or straight pier) will not appear with straight edges—namely, they will be seen as “pushed out” or “pulled in” near the picture center. The range of objects will also be incorrectly shown.

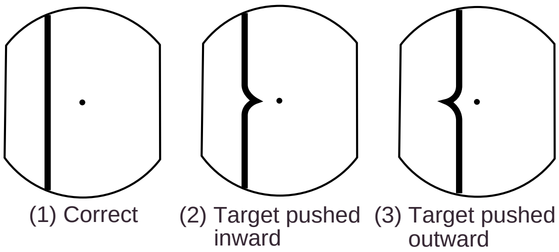

Figure 4-9 Examples of improper and correct sweep timings

1) Transmit the radar on the shortest range and adjust the sensitivity and STC.

2) Visually select a straight echo (harbor wall, straight pier).

3) Display the Installation Setup 2 menu and select Adjust Sweep Timing.

5) While looking at the target selected at step 2, press cursor pad at the 9 o’clock or 3 o’clock position to straighten the target.

6) Press the [ENT] key.

4.10 Closing the Installation Menus

Press the [MENU] key and turn off the power.

4.11 Signal Cable Connection

1. Connect the signal cable to DJ-1 on the rear panel of the display unit.

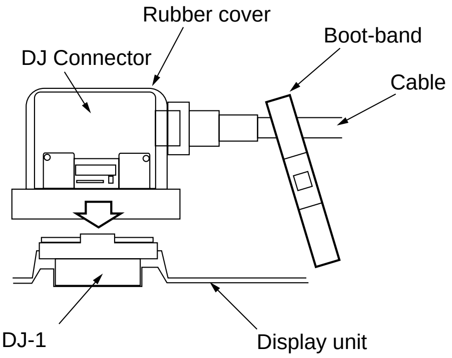

2. Cover the connector with the rubber cover. The projection on the connector base is inserted into the groove on the rubber cover.

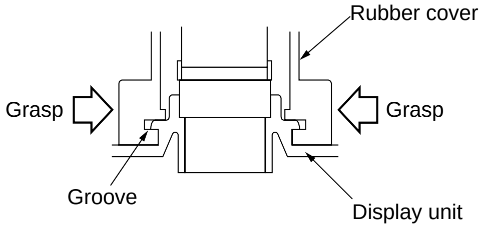

3. Put the boot-band as shown below, and tighten it.

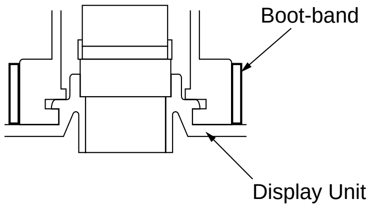

Appendix A
INSTALLATION OF BUFFER CIRCUIT

The optional buffer circuit enables connection of the FMD-811 to the radars listed in Table 1.

Table 1 Buffer circuit and applicable radars

Name	Code No.	Type	Applicable Radars
Buffer PWB Kit	008-471-070	OP03-137	MODEL 1720/1730/1750/1760 MODEL 1830/1930/1940 FR-7010D/7040D/7100D MODEL 1721/1731/1751/1761

A.1 Assembling the Buffer Circuit

Soldering of connector posts

Solder appropriate I/O signal connector post (supplied) to both J12 and J22 on the BUFFER Board (03P9199). (Solder connector posts with their #1 pin mated with corresponding #1 pin on the BUFFER Board.) Three types of connector posts are supplied. Select proper connector posts according to main radar by referring to the table below.

Table 2 Main radar and connector post to use

Main radar	MODEL 1720,1730, 1750, 1760	MODEL 1830, 1930, 1940 FR-7010D/7040D/7100D	MODEL 1721, 1731, 1751, 1761
Connector post to solder to J21 and J22	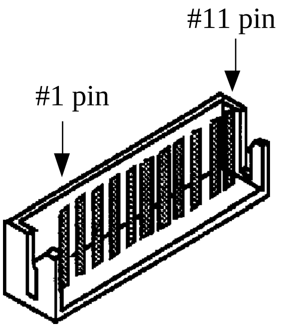 11P connector post	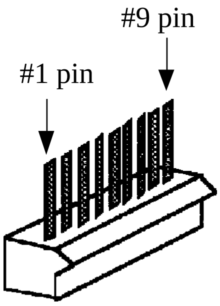 9P connector post	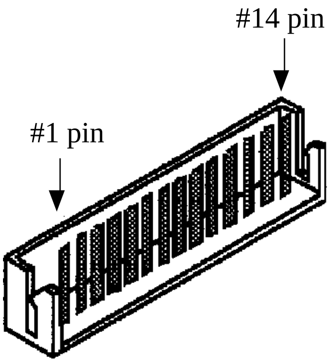 14P connector post

Attachment of double-sided tape (supplied) to BUFFER Board

This should be done at room temperature.

1. Shorten leads of connector posts (soldered at previous section) on the underside of the BUFFER Board with pincers.
2. Wipe off foreign material from the underside of the BUFFER Board with a clean cloth. Peel off cover tape on one side of the double-sided tape and attach it to the underside of the board. Wait 20 minutes to allow the tape to adhere to the board.

A.2 Mounting the BUFFER Board in the Main Radar

1. Detach cover of the main radar.
2. Disconnect the wire assembly connected to J52 on the SPU Board.
3. Clean the mounting location for the BUFFER Board in the main radar, referring to the illustrations on this page for mounting location.
4. Peel off cover tape from double-side tape on the BUFFER Board and attach the board to the chassis.
5. Allow 20 minutes for the board to adhere to the chassis.

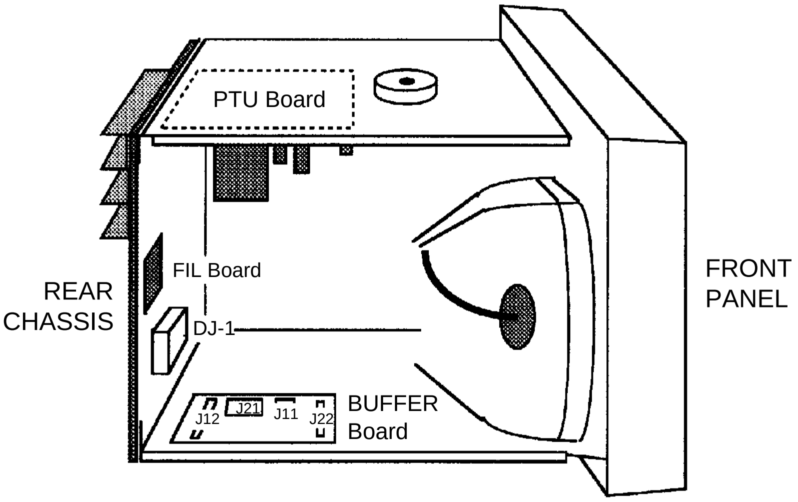

1720 Series

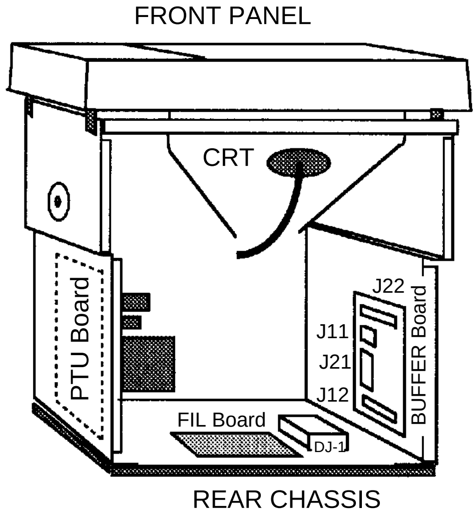

1830 Series

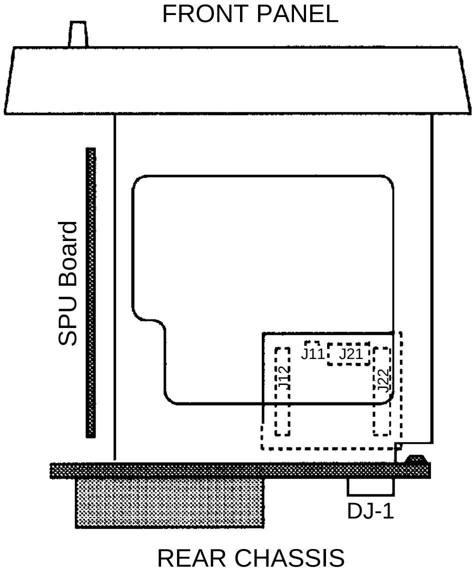

1721 Series

A.3 Wiring

1. Connect wire assembly disconnected in step 2 in the previous section between J12 on the BUFFER Board and DJ-1 on the rear chassis. (Because the wire assembly is long, be sure it does not touch the FIL Board or CRT. Locate it near the BUFFER Board.)

2. On the BUFFER Board, connect the appropriate wire assembly (supplied) as follows;

1720 Series (wire assy. 1):	11P connector to J22 and 3P connector to J11
1830/FR-7000D Series (wire assy. 2):	9P connector to J22 and 3P connector to J11
1721 Series (wire assy. 3):	14P connector to J22 and 3P connector to J11

3. Route the wire assembly connected at step 2 to the SPU Board through the path previously used to pass wire assembly between DJ-1 and the SPU Board. Connect the wire assembly to the SPU Board as follows;

1720 Series:	3P connector to J57 and 11P connector to J52
1830/FR-7000D Series:	3P connector to J57 and 9P connector to J52
1721 Series:	3P connector to J57 and 14P connector to J52

4. Make a hole in "OPTION" on the rear of the remote display and connect the signal cable (supplied with FMD-811) there. Connect the other end of the signal cable to J21 on the BUFFER Board. Seal the hole with sealing putty.

5. Confirm wiring. Attach cover of main radar.

A.4 Operation Checks

1. Connect antenna and power cables. Turn on the main radar.

2. Transmit the main radar. Confirm that the picture is as before the installation.

3. Turn on the remote display and set it to transmit condition. Confirm that the same picture appears on both the main radar and the remote display.

4. Confirm that the picture on the main radar does not change when the remote display is operated.

A.5 Troubleshooting

If...	Then...	Remedy
main radar cannot be turned on	J11 and J12 are reversely connected.	Reverse J11 and J12.
power to main radar turns off soon after being turned on		
there is no picture on main radar even though radar pulses are being transmitted		
main radar is out of tune		
gain control on main radar does not provide intended function		
heading indication on main radar is wrong		
HEADING SIGNAL MISS appears on main radar		

A.6 Specifications

Complete Set

Name	Parts	Type	Qty	Remarks
BUFFER Board		03P9199	1	70 x 55 (mm)
Installation Materials	EH Connector Post	B11B-EH-A	2	For J12 and J22 on BUFFER Board, MODEL 1720/1730/1750/1760
	NH Connector Post	B9P-SHF-1AA-K	2	For J12 and J22 on BUFFER Board, MODEL 1830/1930/1940 FR-7010D/7040D/7100D
	EH Connector Post	B14B-EH-A	2	For J12 and J22 on BUFFER Board, MODEL 1721/1731/1751/1761
	Wire Assy 1	EH11P-L200	1	L=200 (mm), w/11P connector, For MODEL 1720/1730/1750/1760
	Wire Assy 2	NH9P-L250	1	L=250 (mm), w/9P connector, MODEL 1830/1930/1940 For FR-7010D/7040D/7100D
	Wire Assy 3	EH14P-L480	1	L=480 (mm), w/14P connector, For MODEL 1721/1731/1751/1761
	Double-sided Tape		1	70 x 55 (mm)

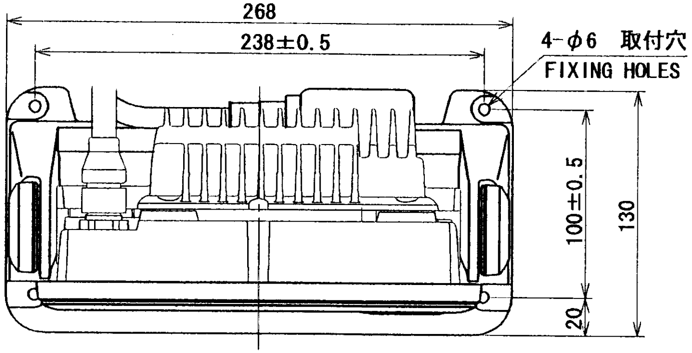

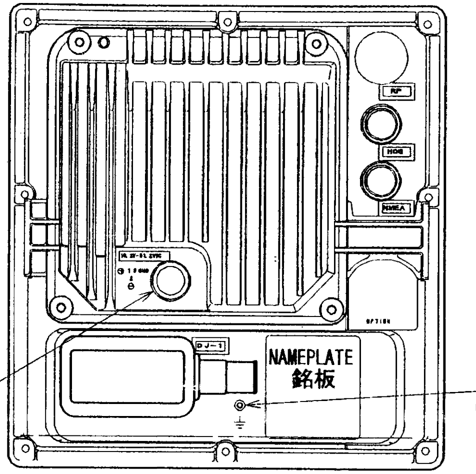

表 1
TABLE 1

寸法区分(mm) DIMENSION	公差(mm) TOLERANCE
0 < L ≦ 50	±1.5
50 < L ≦ 100	±2.5
100 < L ≦ 500	±3

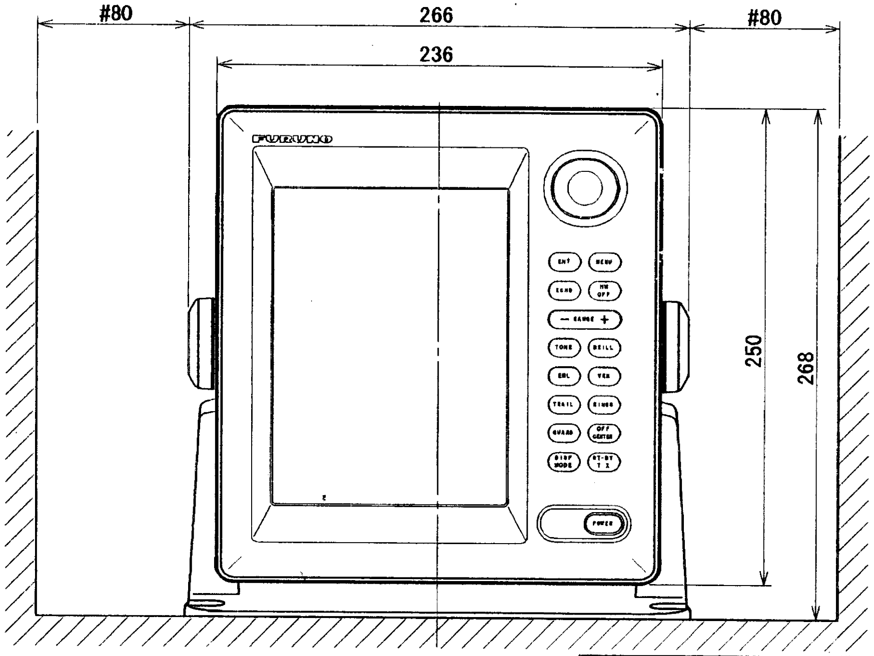

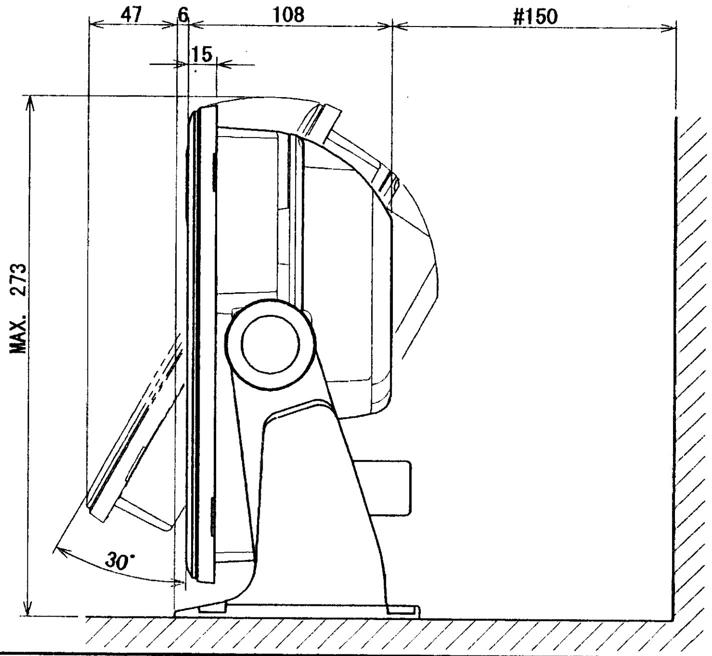

注記
1）指定なき寸法公差は表１による。
2）#：推奨する最小サービス空間寸法。
NOTE
1. TABLE 1 INDICATES TOLERANCE OF DIMENSIONS.
2. #: RECOMMENDED SERVICE CLEARANCE.

DRAWN Sep.18'00 T.YAMASAKI			TITLE	RDP-113/114
CHECKED Sep.19'00 T.Kimi	FMD-811		名称	指示部
APPROVED Sep.19'00 T.Kimi	MODEL 841 MODEL 821			外寸図
SCALE 1/4	MASS 2.8 kg ±10%		NAME	DISPLAY UNIT
DWG. No. C3416-G01-C	03-129-1000-G0			OUTLINE DRAWING

FURUNO ELECTRIC CO., LTD.

FURUNO

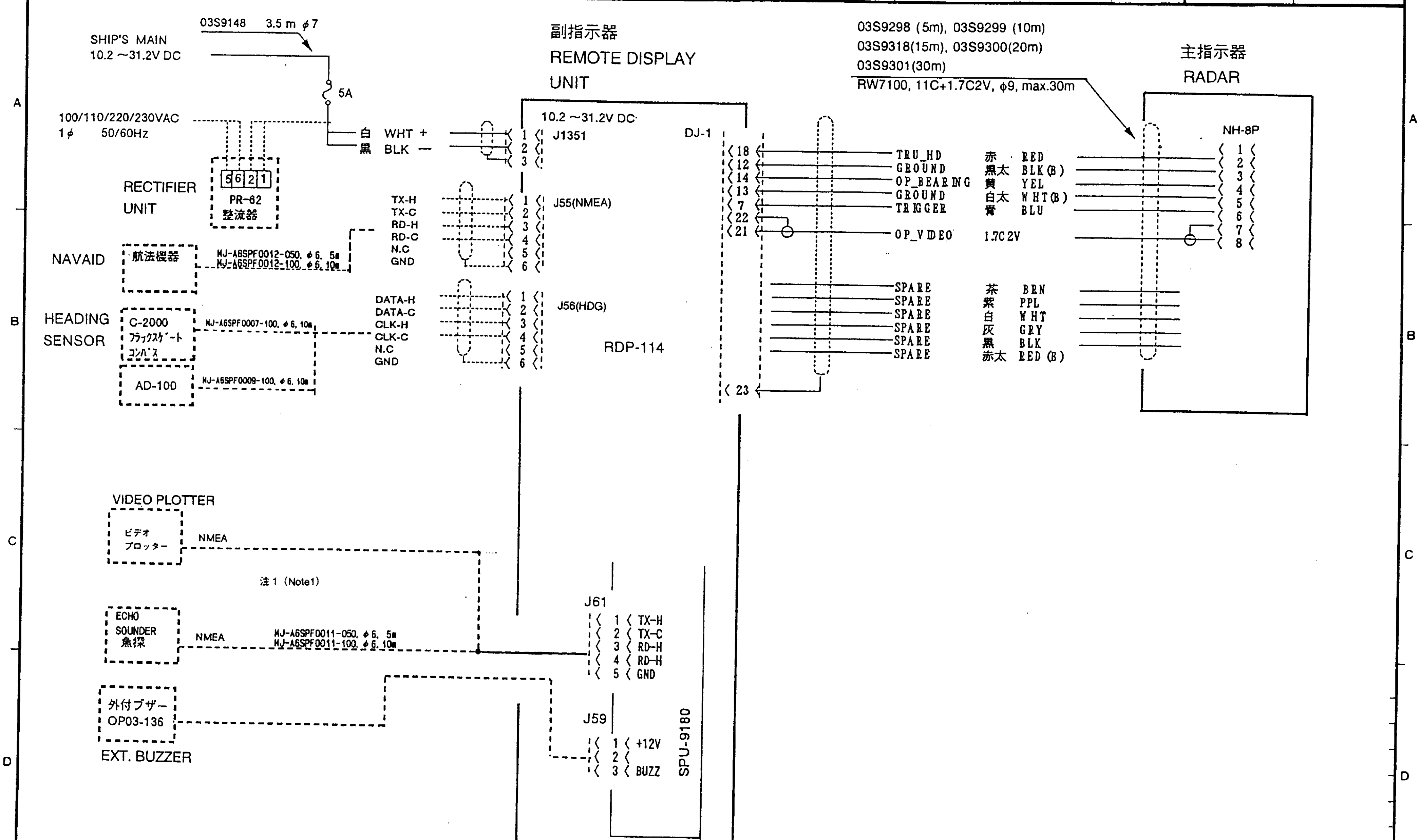

注1) J55の3番とJ61の1番、J55の4番とJ61の2番をジャンパーすると、航法装置から受信したデータをJ61から出力します。

NOTE 1) By putting two jumper wires ; J55#3 - J61#1 and J55#4 - J61#2, nav data received from navaid can be bypassed.

DRAWN Sep. 12 '97 T.YAMASAKI		TYPE FMD-811
CHECKED Sep 16 '97 K.Kusunoki		名称 レーダー副指示器 相互結線図
APPROVED Sep 16 '97 H.Yamaguchi		
SCALE / MASS kg	APPLICABLE TO: (MODEL) / BLOCK NO.	NAME RADAR REMOTE DISPLAY INTERCONNECTION DIAGRAM
DWG NO. C3427-C01- D	03-129-6024- 02	

FURUNO ELECTRIC CO., LTD.

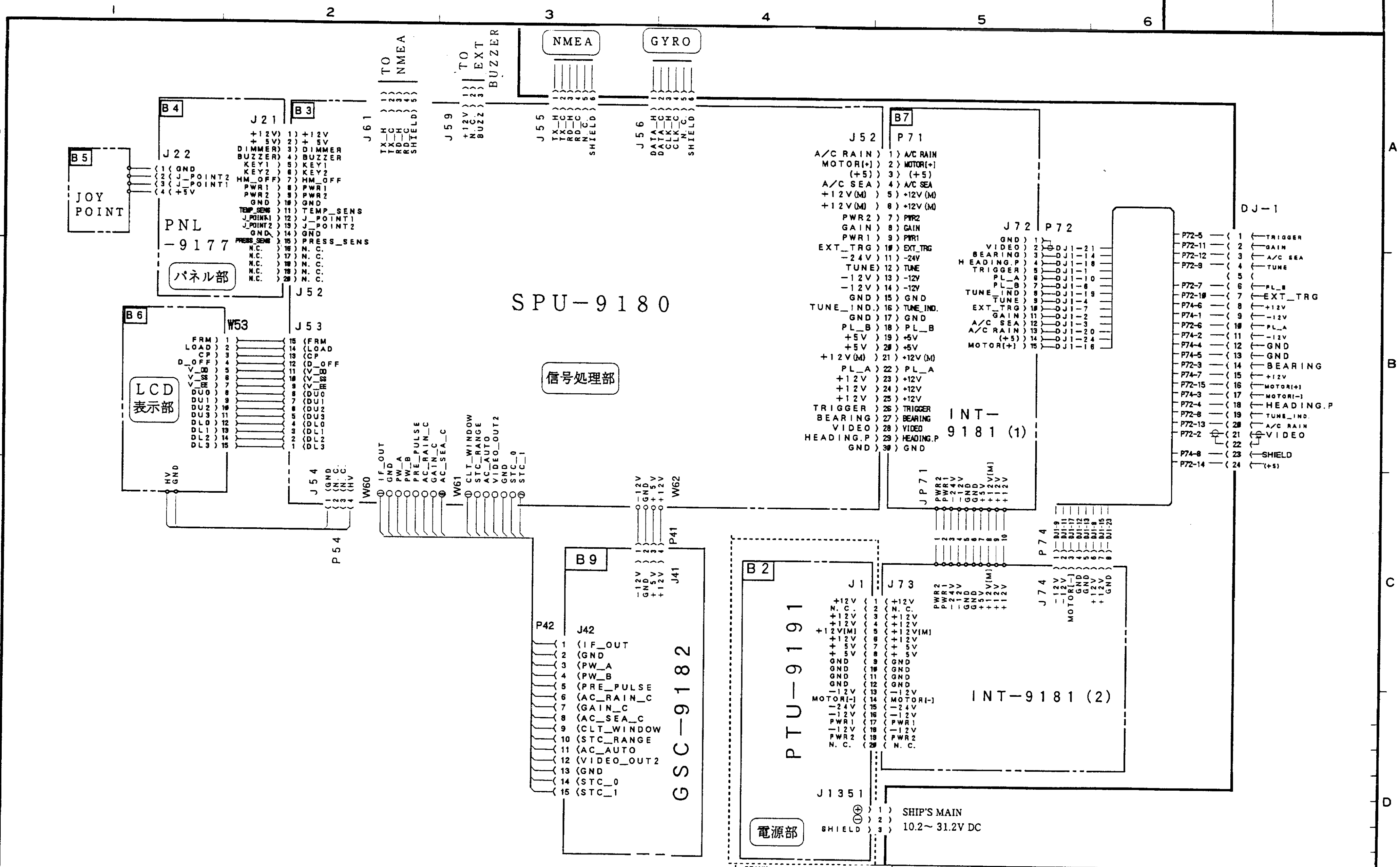

DRAWN	MAY 22 '96 T. YAMASAKI
CHECKED	MAY 23 '96 K. OKAMOTO
APPROVED	MAY 23 '96 K. OKAMOTO
SCALE	⁄
MASS	— kg
DWG NO.	C3427-K01- B
APPLICABLE TO: (MODEL)	FMD-811
BLOCK NO.	03-129-6022- 00
TYPE	RDP-114
名称	総合 回路図
NAME	GENERAL SCHEMATIC DIAGRAM

FURUNO ELECTRIC CO., LTD.

FURUNO

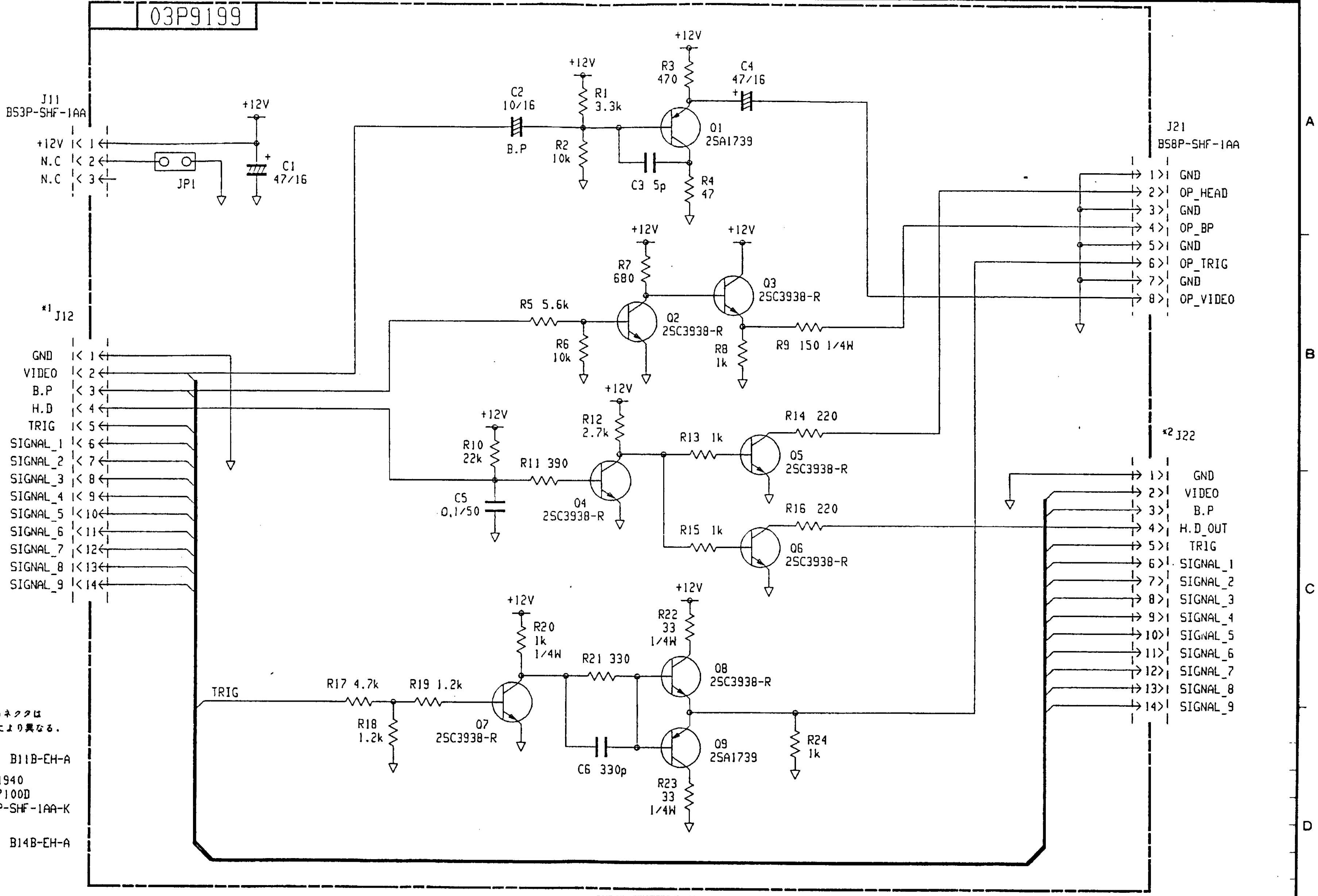

*1/*2：J12/J22に実装するコネクタは
メインレーダーの機種により異なる。

MODEL1720/1730/
1750/1760: B11B-EH-A

MODEL1830/1930/1940
FR-7010D/7040D/7100D
FR-7040R: B9P-SHF-1AA-K

MODEL1721/1731/
1751/1761: B14B-EH-A

*1/*2: Select type of connector for J12/J22 as below.
M1720/1730/1750/1760; B11B-EH-A
M1830/1930/1940, FR7010D/7040D/7100D,
and FR7040R; B9P-SHF-1AA-K
M1721/1731/1751/1761; B14B-EH-A

DRAWN Oct.22.'97 T.YAMASAKI		TYPE 03P9199
CHECKED Oct.23.'97 K.Kusunoki		名称 バッファプリント基板
APPROVED Oct.23.'97 H.Yamaguchi	OP03-137	回路図
SCALE / MASS kg	APPLICABLE TO: (MODEL) / BLOCK NO.	NAME BUFFER PCB
DWG NO. C3427-K02- B	03-129-6026- 00	SCHEMATIC DIAGRAM

FURUNO ELECTRIC CO., LTD.

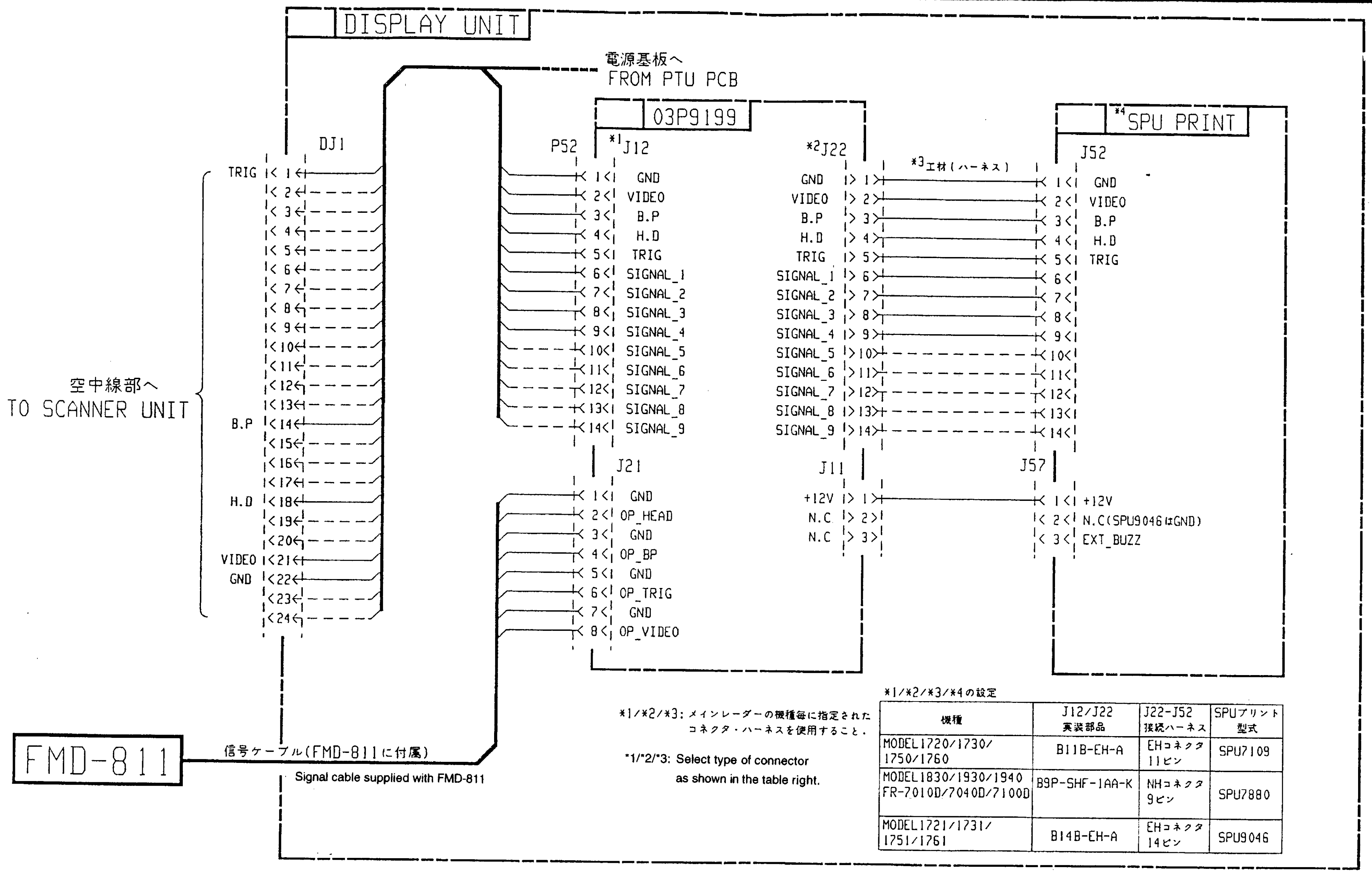

*1/*2/*3: メインレーダーの機種毎に指定されたコネクタ・ハーネスを使用すること。

*1/*2/*3: Select type of connector as shown in the table right.

*1/*2/*3/*4の設定

機種	J12/J22 実装部品	J22-J52 接続ハーネス	SPUプリント 型式
MODEL1720/1730/1750/1760	B11B-EH-A	EHコネクタ 11ピン	SPU7109
MODEL1830/1930/1940 FR-7010D/7040D/7100D	B9P-SHF-1AA-K	NHコネクタ 9ピン	SPU7880
MODEL1721/1731/1751/1761	B14B-EH-A	EHコネクタ 14ピン	SPU9046

DRAWN Oct. 22 '97 T. YAMASAKI			TYPE OP03-137
CHECKED Oct. 23 '97 K. Kusunoki			名称 バッファ回路キット
APPROVED Oct. 23 '97 Y. Yamaguchi	FMD-811		相互結線図
SCALE / MASS kg	APPLICABLE TO: (MODEL)	BLOCK NO.	NAME BUFFER PCB KIT
DWG NO. C3427-C02- B	03-129-6024- 02		INTERCONNECTION DIAGRAM

FURUNO ELECTRIC CO., LTD.